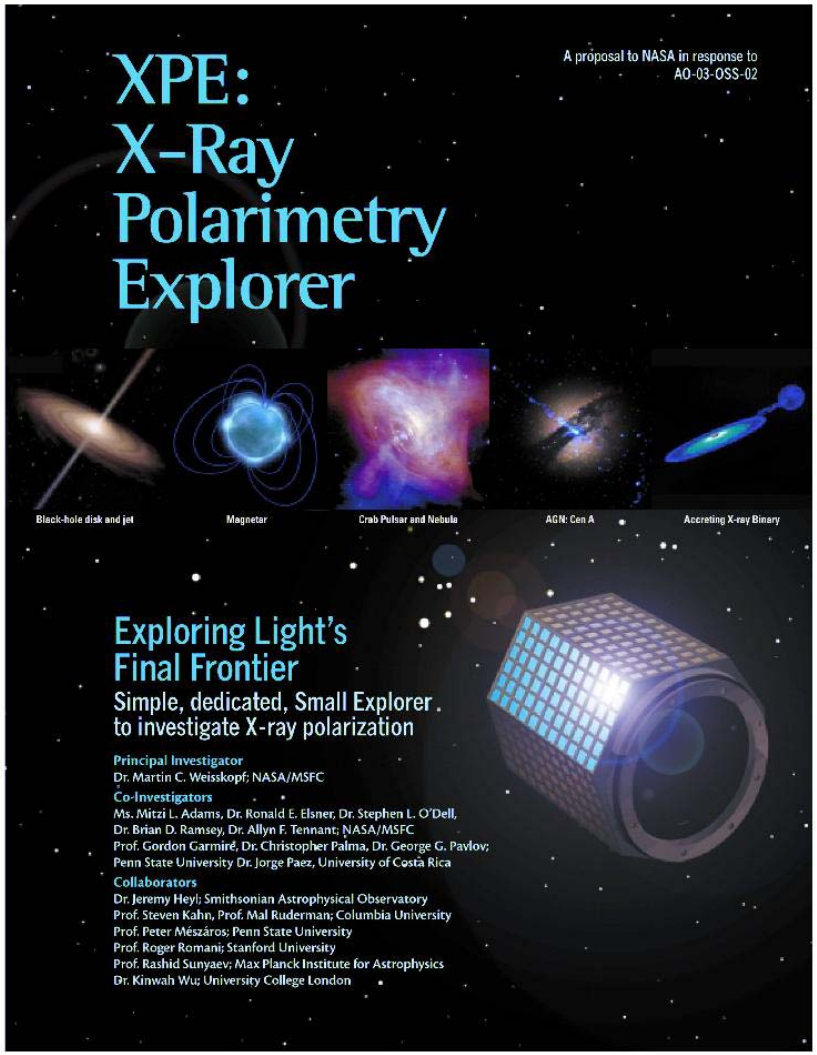

XPE

P.I. Martin Weisskopf / MSFC

Co.Is.

NASA/MSFC

Penn State University

University of Costa Rica

Collaborators

SAO

Columbia University

Stanford University

Max Planck Institute

University College London

XPE (SMEX) Design Considerations

- Simple, low-risk design
  - No moving instrument parts
  - No deployables
  - Compact
  - *Inexpensive*
- Proven principles
  - Thomson scattering
- Proven technology
  - Detector system with flight heritage
- Low energy operation
  - Take advantage of higher source fluxes

These considerations lead us to a large-area scattering polarimeter consisting of a passive scatterer surrounded by a detector to register the position and energy of the scattered photon

(SMEX) Design Considerations

- Scatterer
  - Low Z material (maximize scattering to photolelectric cross section ratio)
  - Relatively easy to fabricate
    - Beryllium
  - Geometry to optimize modulation factor
    - Maximize chance of interaction and subsequent exit from scatterer
      - Various geometries investigated
        - » Truncated cone chosen

(SMEX) Design Considerations

- Detector requirements
  - High efficiency in energy range
  - Large area
  - Position sensitive
  - Low background
  - Flight heritage
    - Choose an annular xenon-filled proportional counter to surround the scatterer.

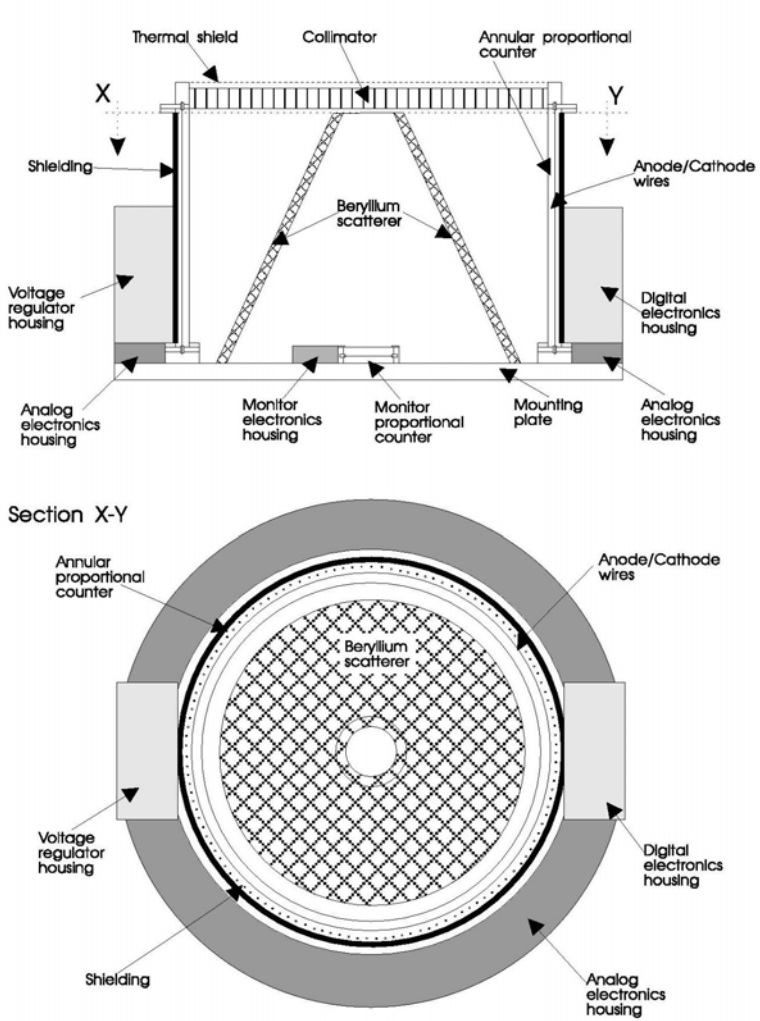
Thermal shield
Collimator
Annular proportional counter
X
Y
Shielding
Anode/Cathode wires
Beryllium scatterer
Voltage regulator housing
Digital electronics housing
Analog electronics housing
Monitor electronics housing
Monitor proportional counter
Mounting plate
Analog electronics housing
Section X-Y
Annular proportional counter
Anode/Cathode wires
Beryllium scatterer
Voltage regulator housing
Digital electronics housing
Shielding
Analog electronics housing

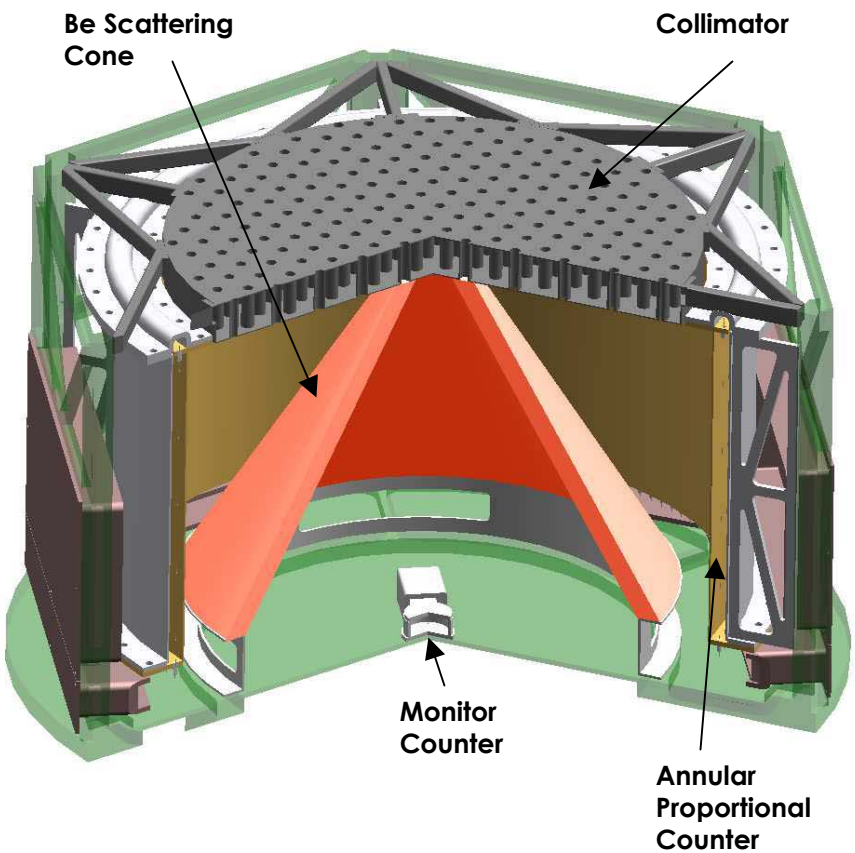

Item	Detail
Annular Proportional Counter	
Height	40 cm
Diameter (inner, outer)	72, 76 cm
Fill gas	Xenon + quench
Pressure	2.10^5 Pa
Entrance Window	2.3 mm Be
Scattering Cone	
Material	Be
Diameter (inner, outer)	9, 60 cm
Height	40 cm
Thickness	3 cm
Collimator	
Material	Ti
Thickness	5 cm
Field of View	3°
Transparency	75%
Shielding	
Material	Pb
Thickness	0.25 mm
System Performance	
Energy Range	7-27 keV
Time Resolution	0.25 msec
Energy Resolution @ 10 keV	~ 15% FWHM
Effective Collecting Area @ 15 keV	~ 200 cm^2

Item	Mass [kg]
Annular Proportional Counter	
Outer cylinder (SS) and flanges	33.3
Inner cylinder (Be) and flanges	20.4
Top flange	13.8
Lead shielding	3.7
Beryllium Cone Scatterer	
Beryllium cone	22.2
Support ring	0.8
Assembly	24.4
Electronics	
Digital electronics and boxes	6.4
Analog electronics and boxes	12.3
Cables and connectors	1.5
Support Frame	
Assembly (composite)	26.1
Monitor Counter	
Assembly	1.2
Total	**166.1**

Item	Power [Watts]
APC/MPC Detector Electronics	
Preamplifiers and shapers	0.7
Peak-hold & Summing circuits	3.5
Trigger circuits & A/D	3.0
Command and Data Subsystem:	
Internal control interfaces	1.0
CPU/Memory	3.5
Spacecraft Interfaces	1.0
Housekeeping signal conditioning	2.5
High-Voltage Power Supplies	
APC Detector (odd)	2.5
APC Detector (even)	2.5
MPC Detector	2.5
@ 75% power conversion efficiency	30.3
Contingency @ 15%	4.5
Total	**34.8**

XPE Spacecraft

FOLDOUT 4

A Spacecraft Views

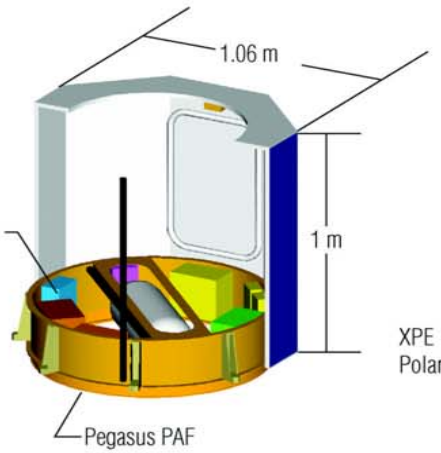

XPE Spacecraft Bus is a simple spin stabilized design

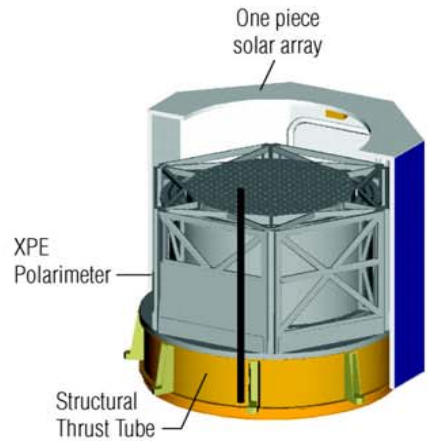

Spacecraft Bus easily accommodates XPE instrument

XPE is easily accommodated by the Pegasus XL launch vehicle

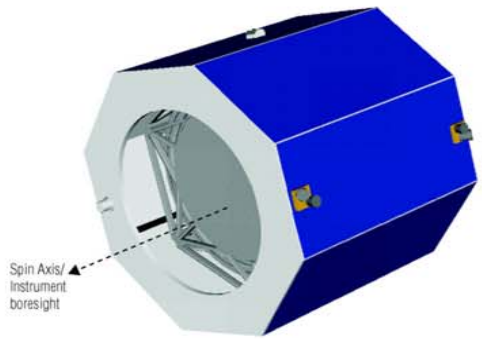

XPE on-orbit configuration provides ideal polarimeter platform

B System Block Diagram

The XPE system block diagram shows simple spacecraft architecture.

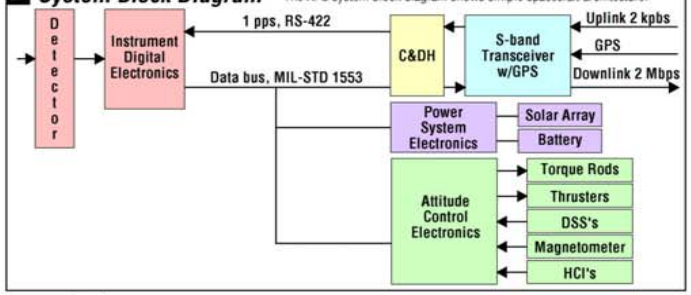

C Resources

XPE has ample mass and power margins.

SUBSYSTEM	Mass (kg)	Mass Reserve %	Mass Reserve (kg)	OAP* (Watts)	Power Reserve %	Power Reserve (Watts)
XPE Instrument	151.0	15%	22.7	30.3	15%	4.5
Structural	37.7	10%	3.8	-	-	-
Attitude Control	19.2	10%	1.9	21.00	10%	2.1
Power System (includes harness)	18.2	10%	1.8	13.5	10%	1.4
C&DH	6.0	10%	0.6	19	10%	1.9
Communication	9.5	10%	1.0	11.5	10%	1.2
Thermal	3.6	10%	0.4	5	10%	0.5
Cold Gas ACS System	10.6	10%	1.1	1	10%	0.1
Cold Gas Propellant (N2)	4.0	10%	0.4	-	-	-
Observatory Totals	259.8	12.9%	33.5	101.3	11%	11.6
Totals plus Reserve			293.4			112.9
Pegasus XL Capability	374					
Power System Capability (EOL)				133.1		
Total Margin	114.2			31.8		
Total Margin %	43.9%			31%		
Margin Above Reserves			80.6			20.2
Margin % Above Reserves			31.0%			19.9%

*OAP = Orbit Average Power

D Equipment List

The spacecraft candidate equipment list shows mission can be developed with low risk using high heritage components.

Component	Canditate Vendor/Model	Status/Heritage	Risk
Spacecraft Computer	RSDO Vendor	Flight proven	Low
Data Bus	MIL-STD-1553	Flight Proven	Low
Spacecraft Flight Software	RSDO Vendor	Flight Proven and New, 50% reuse of existing software	Med
Power System Electronics	RSDO Vendor	Flight Proven	Low
Lithium Ion Battery	Saft	Flight proven technology	Low
Solar Array	To be selected	New design using flight proven technology	Low
ACS Electronics	RSDO Vendor	Flight Proven	Low
Digital Sun Sensor	Adcole/18980	Flight Proven	Low
Horizon Crossing Indicator	Ithaco/Dual HCI	Flight Proven	Low
Magnet Torquers	Ithaco/TR160UPR	Flight Proven	Low
Magnetometer, 3 axis	Goodrich	Flight Proven	Low
Nutation Damper	RSDO Vendor	New design using flight proven technology	Med
S-Band Transceiver	ITT LPT Tranceiver	Flight demo completed	Low
Propulsion Tank (GN2)	SCI/216A	COTS item DOT approved for aviation use	Low
Cold Gas Propulson Components	Various	Industry standard	Low
Aluminum Spacecraft Structure	RSDO Vendor	New design using flight proven technology	Low
Thermal System Components	Various	New design using flight proven technology	Low

XPE Sensitivity

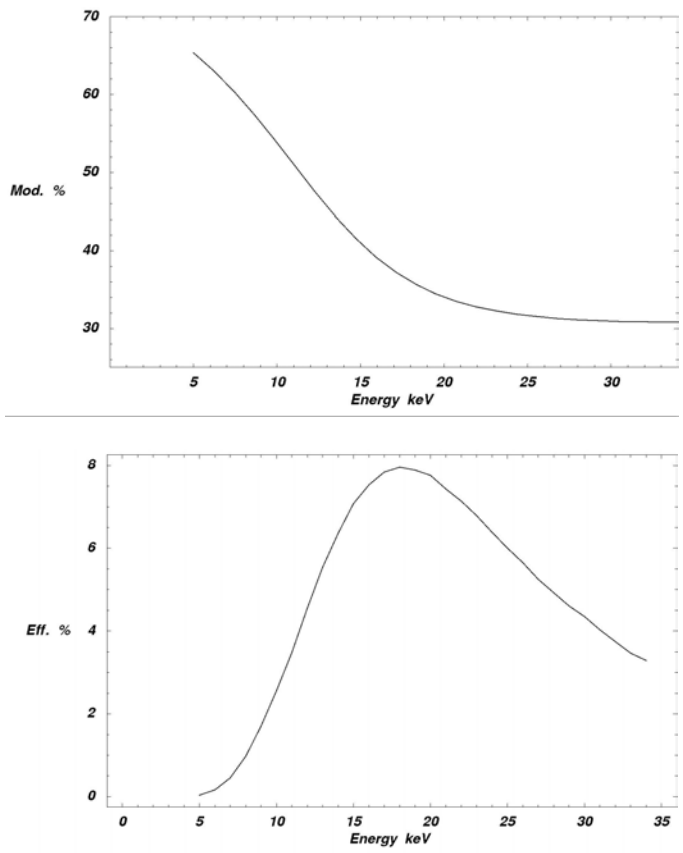

Modulation factor (top) and overall efficiency (bottom) of XPE

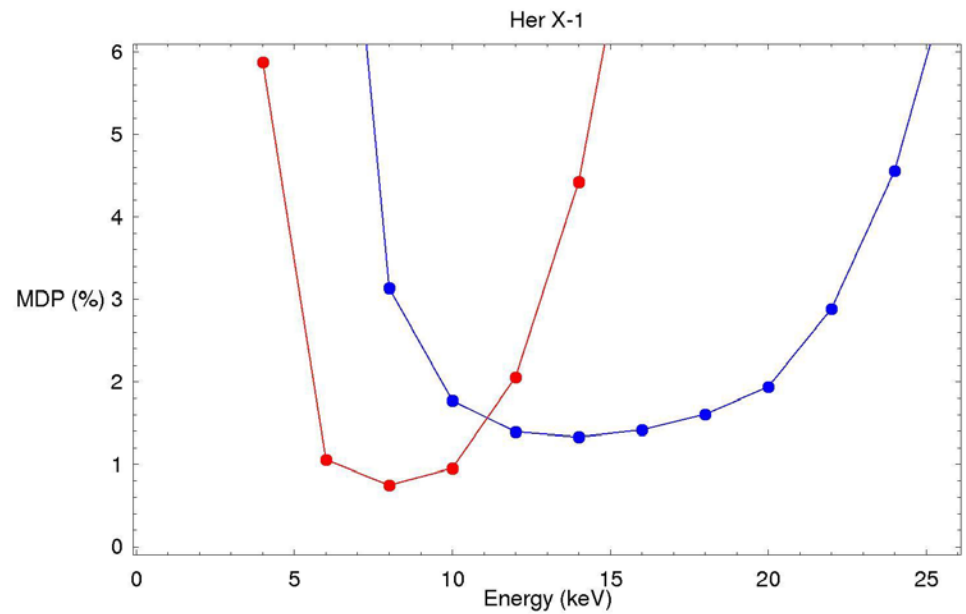

Sensitivity of XPE to Her X-1 in a 4.10^5 sec observation (blue.) SXRP sensitivity shown in red for comparison.

XPE Core Observing Program

Representative sample from various classes of sources

Radio pulsars (isolated, rotation-powered neutron stars) convert rotational energy to ultrarelativistic-particle energy and radiation. Electromagnetic cascades in the very strong (up to 10^{13} G) magnetic field result in a rotating beam of relativistic particles and radiation.

Soft Gamma-ray Repeaters (presumably isolated, magnetic-powered neutron stars) convert magnetic stress ultimately into high-energy radiation and outflow. SGRs and Anomalous X-ray Pulsars (AXPs) may be magnetars, with extremely strong ($10^{14\text{-}15}$ G) magnetic fields.

Pulsating X-ray binaries (accretion-fed neutron stars) channel and convert kinetic energy into X-ray emission at the stellar surface. Rotation and accretion-flow anisotropy, in very strong magnetic fields ($10^{12–13}$ G), modulate the X rays.

Galactic accretion-disk systems (accretion-powered neutron stars or black holes) convert kinetic energy into X-ray emission in the disk. Polarization of accreting binaries with a low-field neutron star or black hole results mainly from scattering.

Galactic superluminal sources (disk–jet sources) convert kinetic energy of accreted material into X radiation and jets of relativistic plasma. Such microquasars lie in an interacting binary containing a (stellar) black hole.

Active Galactic Nuclei (disk–jet sources) convert kinetic energy of accreted material into X radiation and jets of relativistic plasma near the central supermassive (up to 10^9 $M_\odot$) black hole.

XPE Core Observing Program

Name	Type of source	Time (d)	MDP (%)
Crab Pulsar	radio pulsar	29.6	3
Crab Nebula	supernova remnant		0.1
SGR 1900+14	burst active	1	3
4U1636-53	burster	9	3
GS1826-238	clocked burster: persistent	4.3	3
J1808.4-3658	accreting millisecond pulsar	9.1	3
J1751-305	accreting millisecond pulsar	10.3	3
Her X-1	accreting pulsar	0.5	1.9
Cen X-3	accreting pulsar	0.5	1.4
4U0900-40	accreting pulsar	0.5	2.4
GX 1+4	accreting pulsar	0.5	2.1
SMC X-1	accreting pulsar	3.2	3
4U1538-52	accreting pulsar	10.4	3
4U0115+63	accreting pulsar	0.5	2.4
OAO1657-41	accreting pulsar	4	3
4U1626-67	accreting pulsar	1.3	3
Cyg X-3	4.8-h binary	1	3
4U1822-37	accreting disk corona	8.3	3
Sco X-1	quasi-periodic oscillator	0.5	0.6
Cyg X-2	quasi-periodic oscillator	0.5	2.8
GX 5-1	quasi-periodic oscillator	0.5	2
Cir X-1	quasi-periodic oscillator	0.5	2
Cyg X-1	black-hole candidate	0.5	0.9
J1744-28	busting pulsar: high state	0.5	0.6
GRS 1915+105	microquasar: high state	0.5	0.4
J1655-40	microquasar: high state	0.5	1.8
Cen A	active galactic nucleus	16.2	3
NGC 4151	active galactic nucleus	24.8	3

- Core program is a survey of different source classes at 3% MDP or better
- Crab observation 3% MDP in each of 10 phase bins
- Program completed in ~ 7.5 months (including slews)
- Leaves ~ 16.5 months for follow-on observations

XPE Final Thoughts

- Costs
  - *Even a very simple, low-risk instrument still took the full $120M available ! (how does anyone do anything more complicated ?)*
- Outcome of proposal
  - Rated category 2
    - Many major strengths, but one major weakness : *"low-brightness sources will be below sensitivity of XPE….Observing program limited by sensitivity of instrument (only 2 AGN accessible [at 3% MDP level.])"*
- The Future (for XPE)
  - ***Unfortunately, as sensitivity goes as the square root of everything that we can adjust, it is hard to see how XPE can be significantly improved ……***