Scattering X-Ray Polarimeters

M.C.Weisskopf, R.F.Elsner, S.L. O'Dell & B.D.Ramsey

Advantages

- Inherently broad band device
  - Astrophysical non-thermal spectra are characteristically broad band
  - Astrophysical diagnostics (model discriminators) may/should benefit from understanding the energy dependence

Basic Principles

- Based on the angular dependence of the incoherent (and coherent) scattering cross-section on the linear polarization of the incident photon

Basic Principles

- Thomson cross-section illustrates the angular dependence

$$d\sigma / d\Omega = (e^2 / mc^2)(\cos^2 \vartheta \cos^2 \varphi + \sin^2 \varphi)$$

- For scattering from bound electrons one must account for both coherent and incoherent scattering and photoelectric absorption

Thompson Approximation

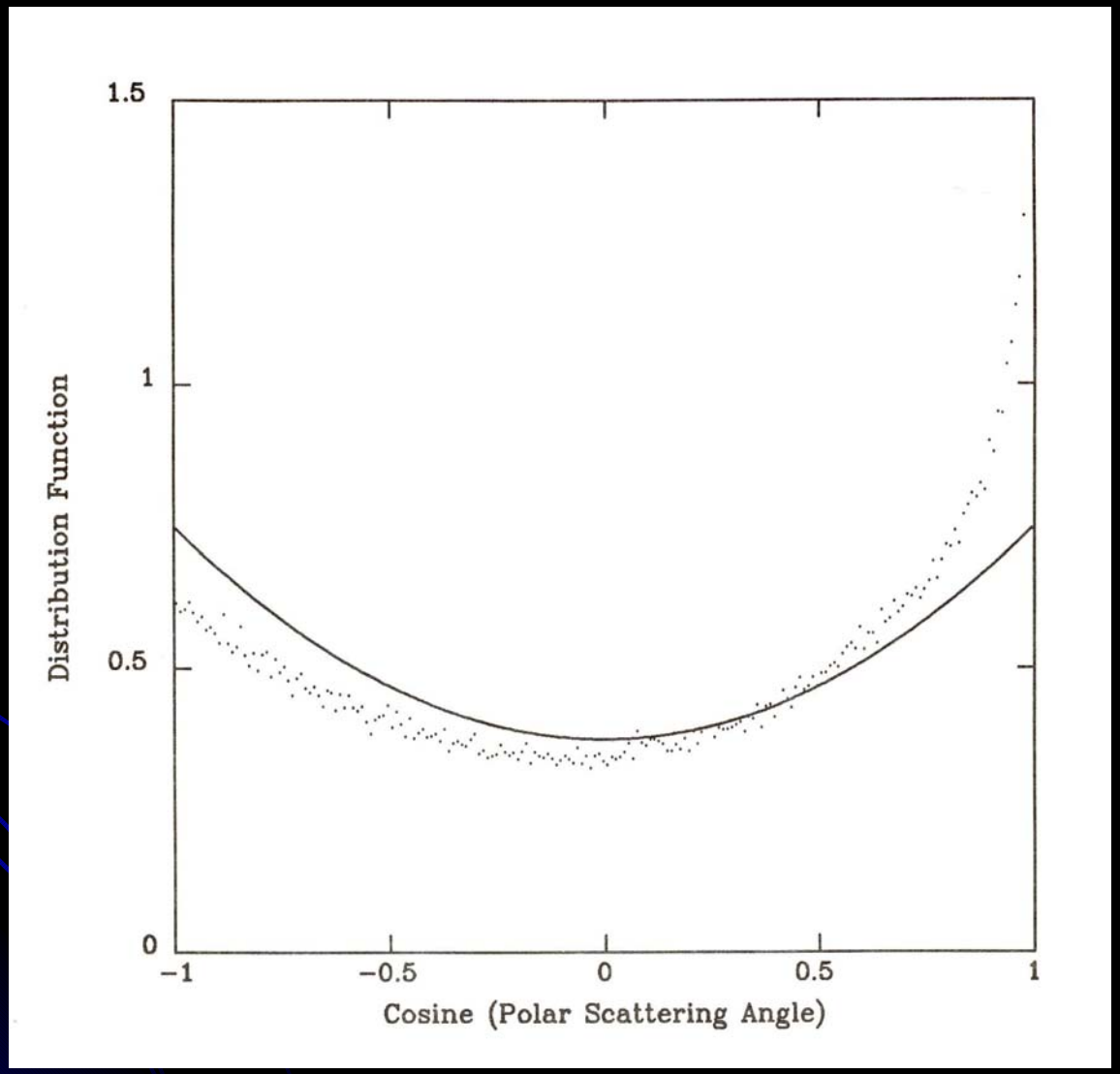

Thompson Approximation

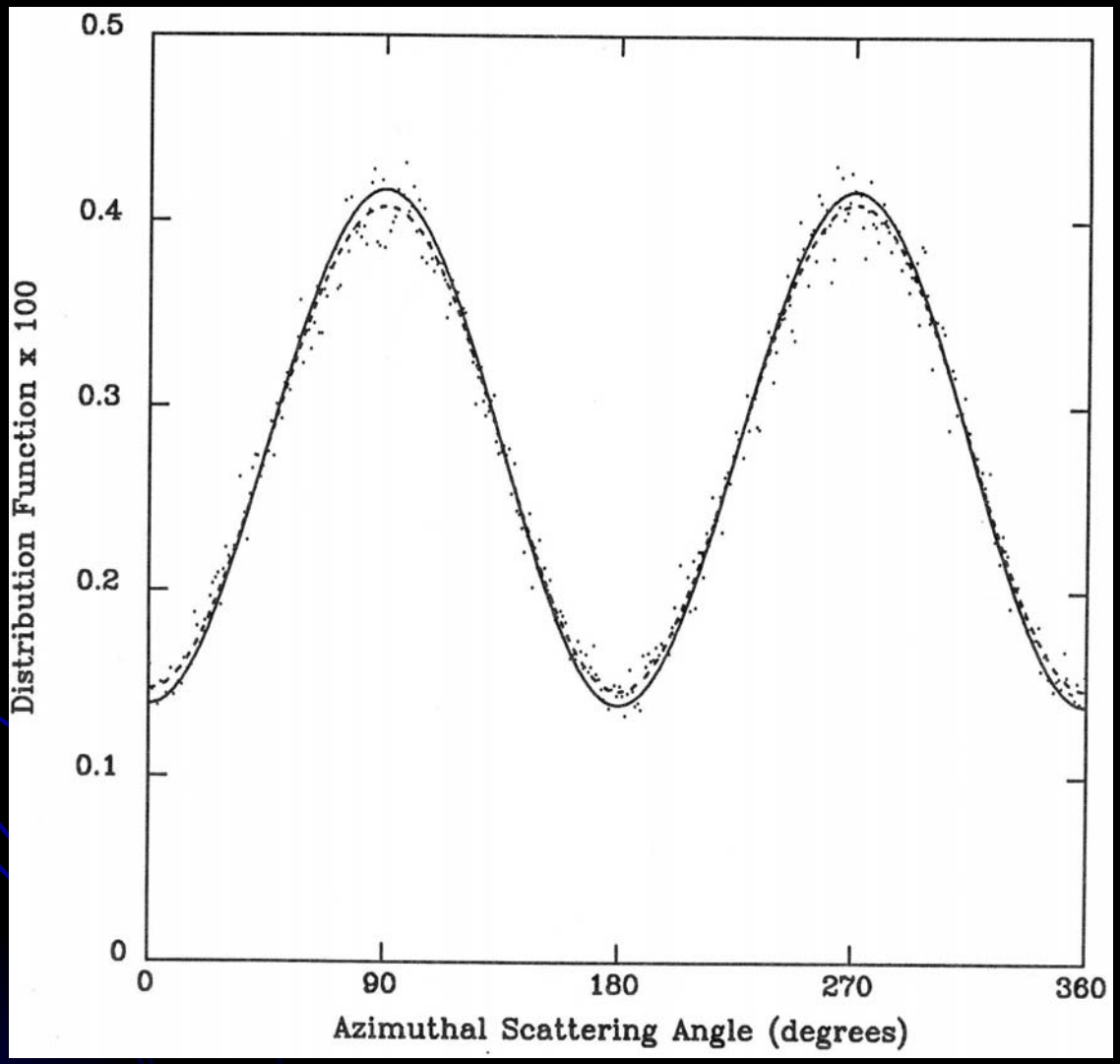

Considerations

- Scatter as much incident flux as possible
- Avoid multiple scattering
- Achieve as large an M as possible

$$MDP(\%) = (4.29x10^4 / M(\%))\sqrt{(R_S + R_B)} / \sqrt{R_S^2 t}$$

- Collect as many scattered X-Rays as possible
- Minimize the background

The Polarimeter Conundrum

- The scattering material should be thick (deep) in order to effectively provide for interaction with all the incident photons.
- The scattering material should be thin (narrow) in order to allow the scattered photon to easily escape.
- (Similar conundrums apply as well to other approaches to polarimetry.)

Interaction Lengths

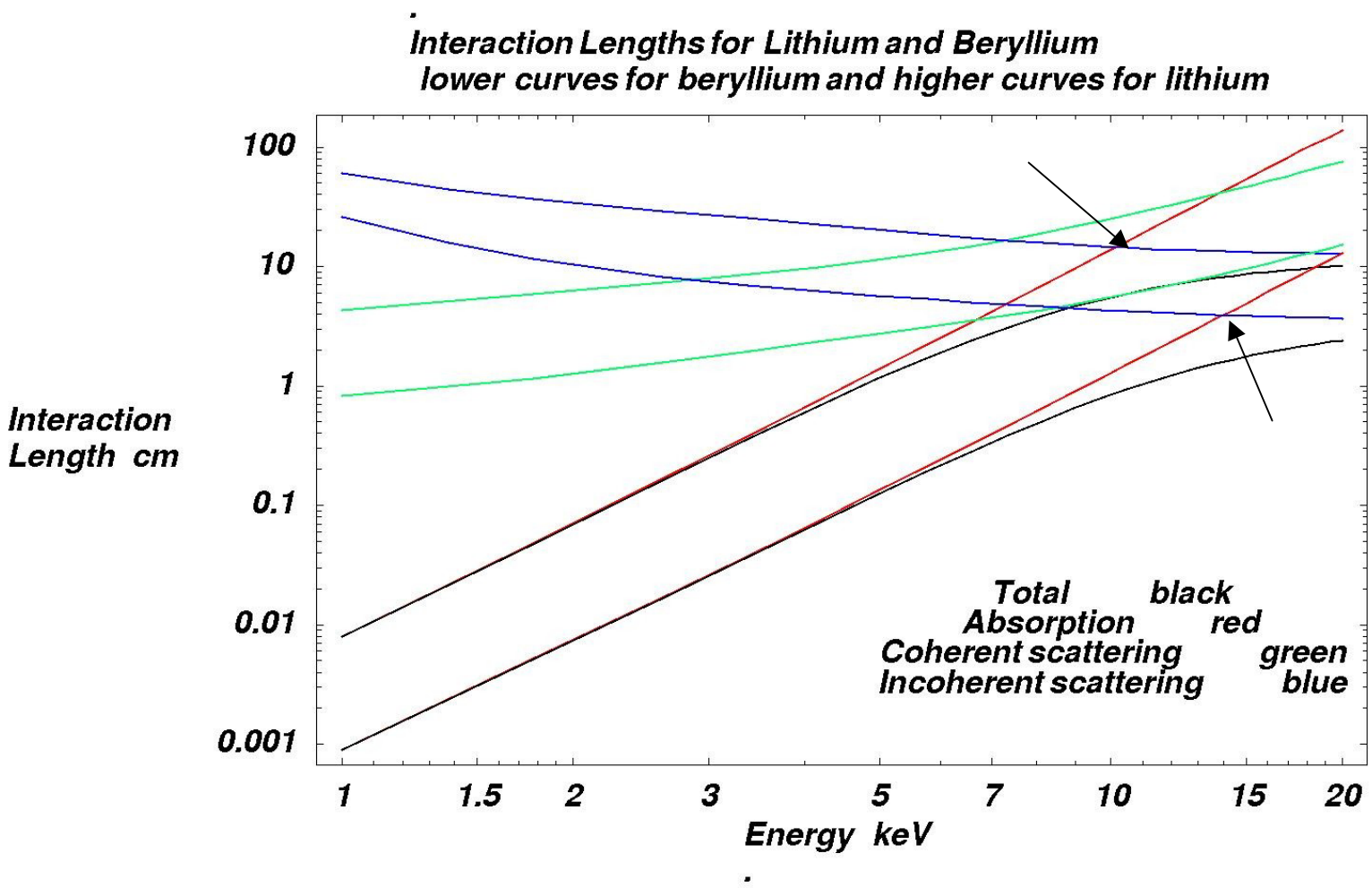

Scattering Coefficients

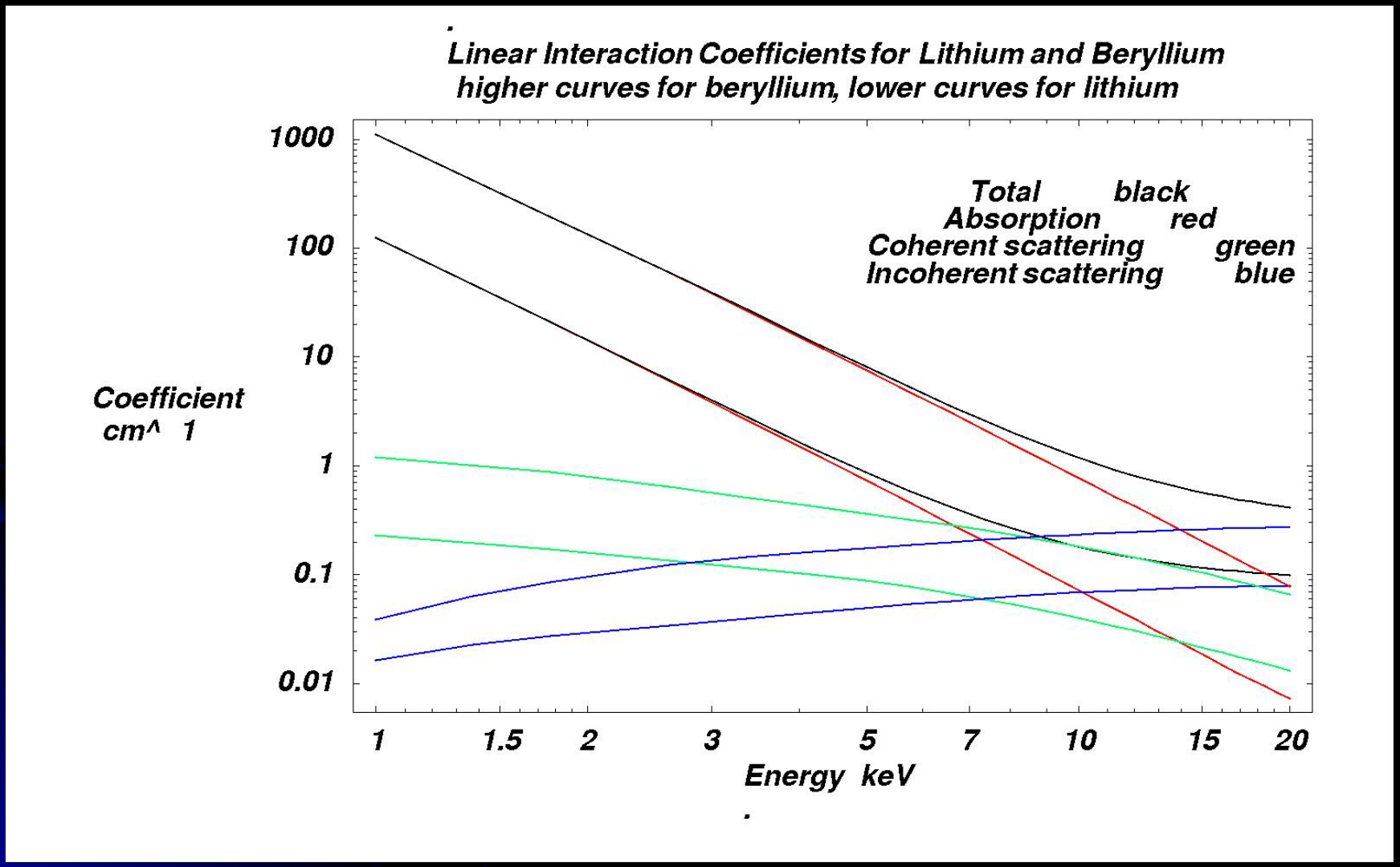

Thus…

- Photo-electric absorption is a real nuisance!!
- Multiple scattering needs to be minimized as this negatively impacts the “modulation factor”
  - The degree of modulation for a 100% polarized beam in the absence of any background.

In the beginning…..

- July 1968 – Lithium-block, Thomson-scattering polarimeter flown on an Aerobee -150 sounding rocket
  - Target was Sco X-1

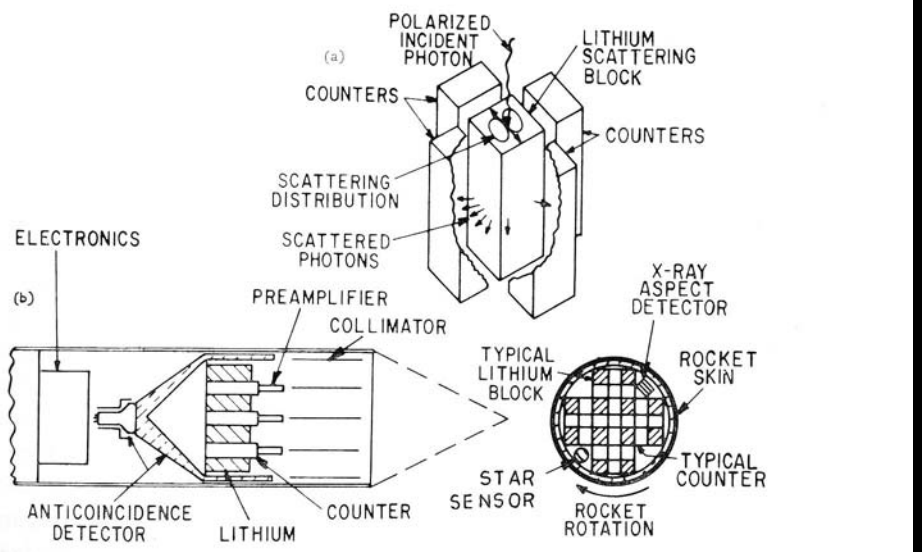

Fig. 1. (a) Schematic representation of the polarimeter concept. (b) Mounting of the polarimeter and ancillary equipment in the rocket.

In the beginning….

- March 1969 - Lithium-block, Thomson-scattering polarimeter flown on an Aerobee -150 sounding rocket
  - Target was the Crab Nebula
- February 1971 Lithium-block, Thomson-scattering polarimeter flown on an Aerobee -350 sounding rocket
  - Target was the Crab Nebula
  - (Included crystal polarimeter)

Three rockets in 21 months

Rocket 17.09

Rocket 17.09

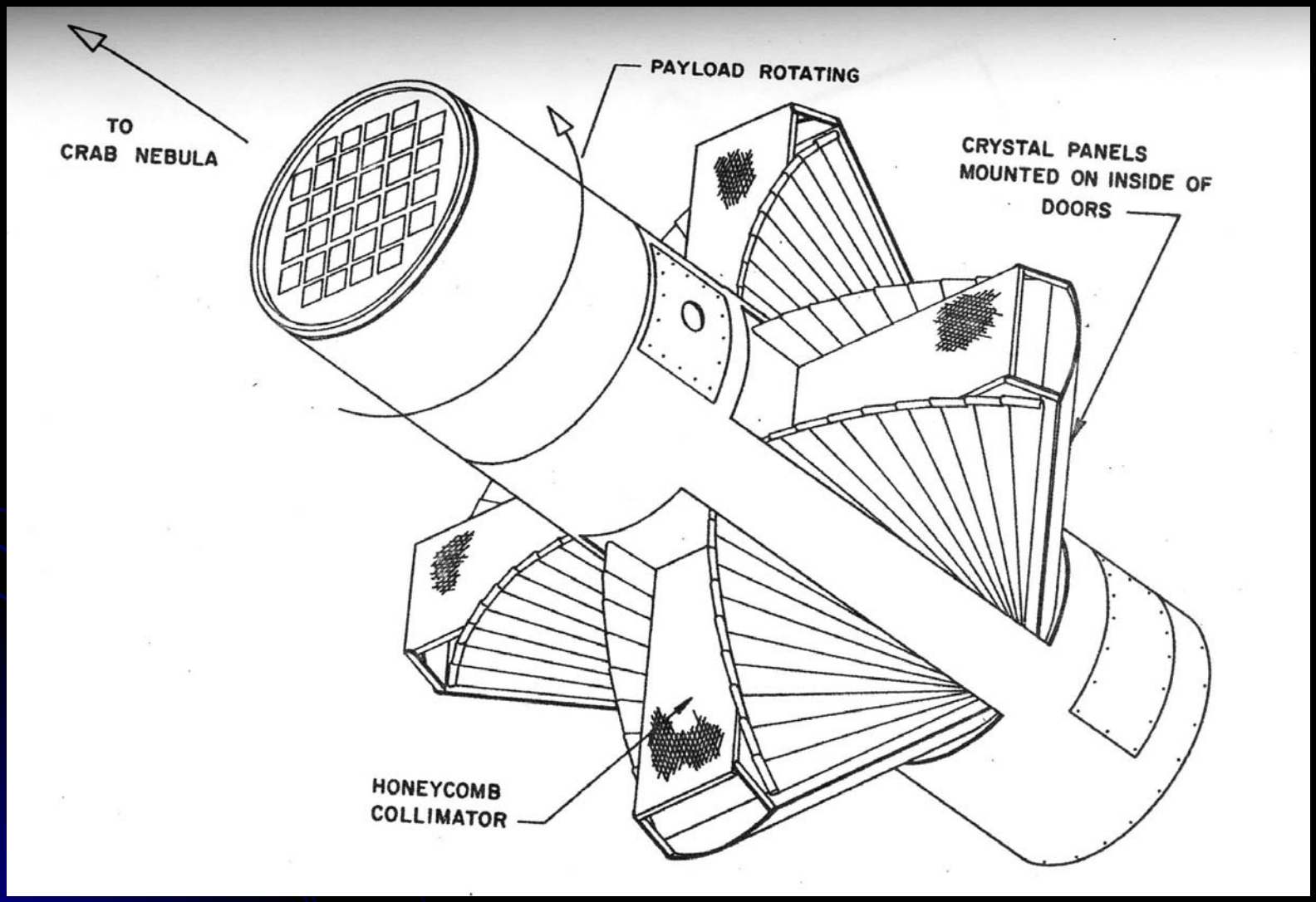
TO
CRAB NEBULA
PAYLOAD ROTATING
CRYSTAL PANELS
MOUNTED ON INSIDE OF
DOORS
HONEYCOMB
COLLIMATOR

Systematic Effects

- Critical design consideration
- Astrophysical Polarization may be/will be small
  - E.g. “east-west” effect was of concern in these early rocket flights

The Results

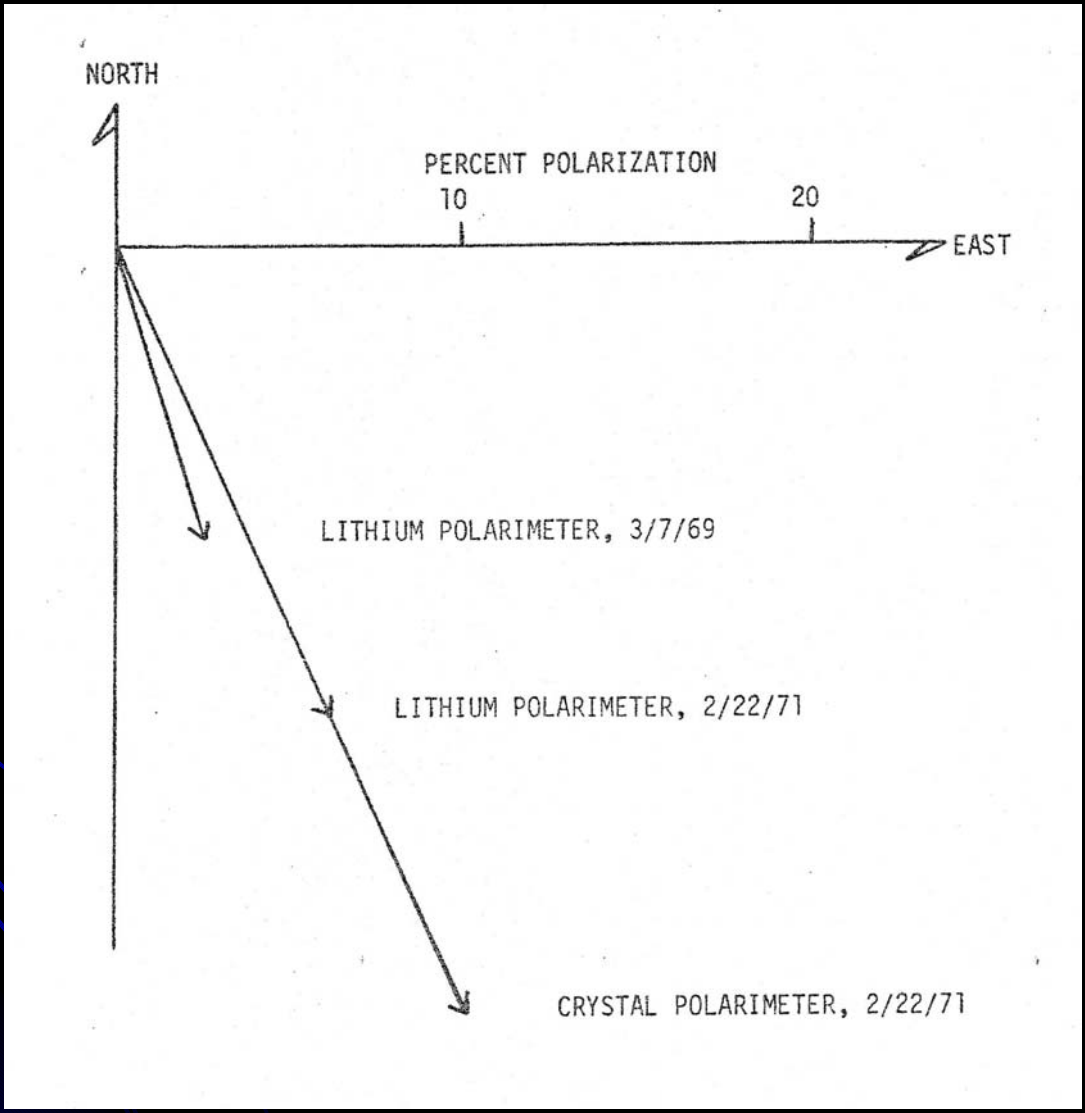
NORTH
PERCENT POLARIZATION
10
20
EAST
LITHIUM POLARIMETER, 3/7/69
LITHIUM POLARIMETER, 2/22/71
CRYSTAL POLARIMETER, 2/22/71

Letters …We send Letters…

UNIVERSITY OF ILLINOIS AT URBANA-CHAMPAIGN
DEPARTMENT OF PHYSICS
URBANA, ILLINOIS 61801

11/9/73

Dear Bob,

This took a little longer to get out than we had anticipated; we hope that it will still prove of help. Indeed, it should — since it seems to us quite likely that polarization measurements may be of significant assistance in deciding whether some of the sources are neutron stars or black holes.

Best

Athil

University of Cambridge

Madingley Road
Cambridge CB3 0HA

Telephone (0223) 62204

Institute of Astronomy

Director:
Professor D. Lynden-Bell

6 November 1973

Dr J. Naugle, Code S
Associate Administrator
Office of Space Science
National Aeronautics and Space Administration
Washington, D.C. 20546
U.S.A.

Dear Dr Naugle,

The purpose of this letter is to emphasise the increasingly important potential role of polarimetric studies in a balanced program of cosmic X-ray astronomy. My only credentials for venturing an opinion on this matter are that I am in close contact with many members of the X-ray astronomy community in

– 3 –

me to express my personal hope that the claims of polarimetry will not be overlooked when new plans are being drawn up. Improved polarimetric observations will be as essential to our understanding of cosmic phenomena as are improvements in positional accuracy, sensitivity and spectral resolution, and should certainly be a part of a balanced and successful X-ray astronomy program.

Yours sincerely,

MR

Martin Rees
(Professor of Astronomy)

New Concepts - Spectrum-X

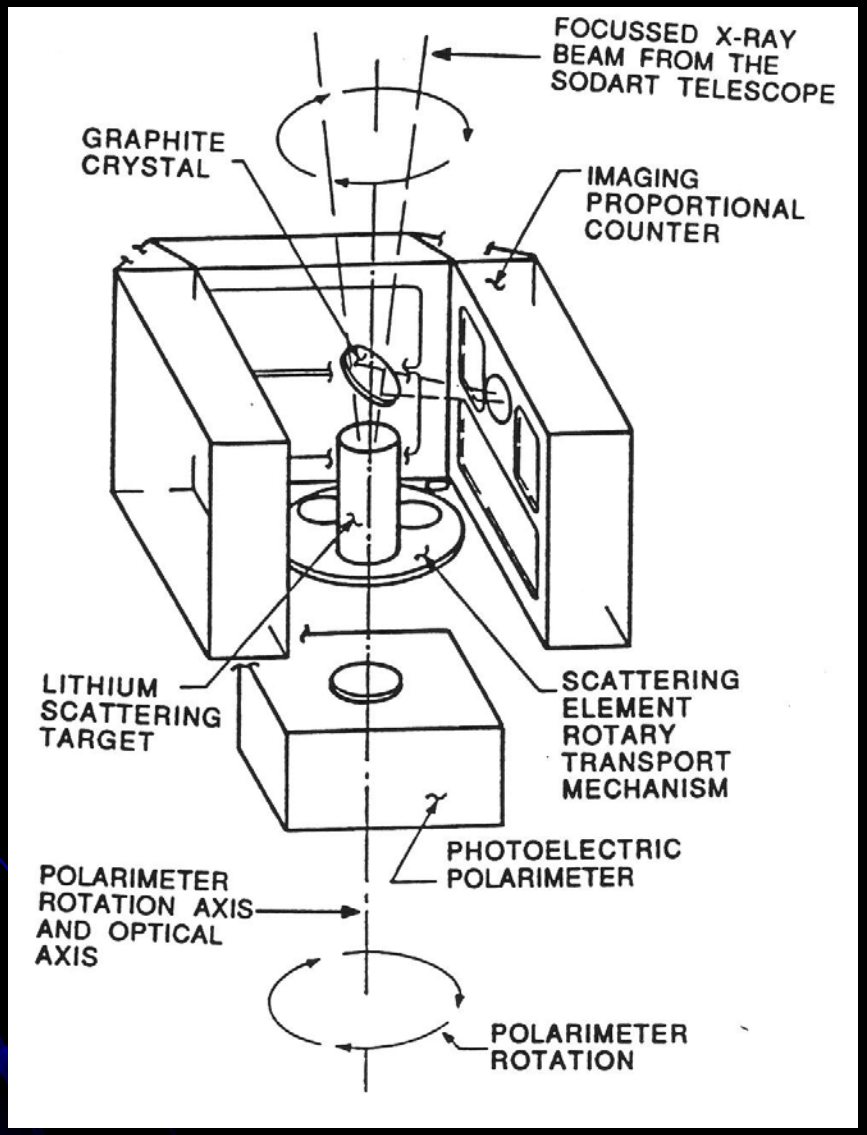

Spectrum-X

- Lithium (and crystal) scattering block at the focus of a telescope
- New systematic effects to worry about
  - Impacts of off-axis pointing
    - Received a lot of attention

Off-Axis Pointing

- A solid angle effect

$$P \cong 100(a_2 / \mu)$$

$$\cong [(\psi / \theta_{res})^2 / \mu]$$

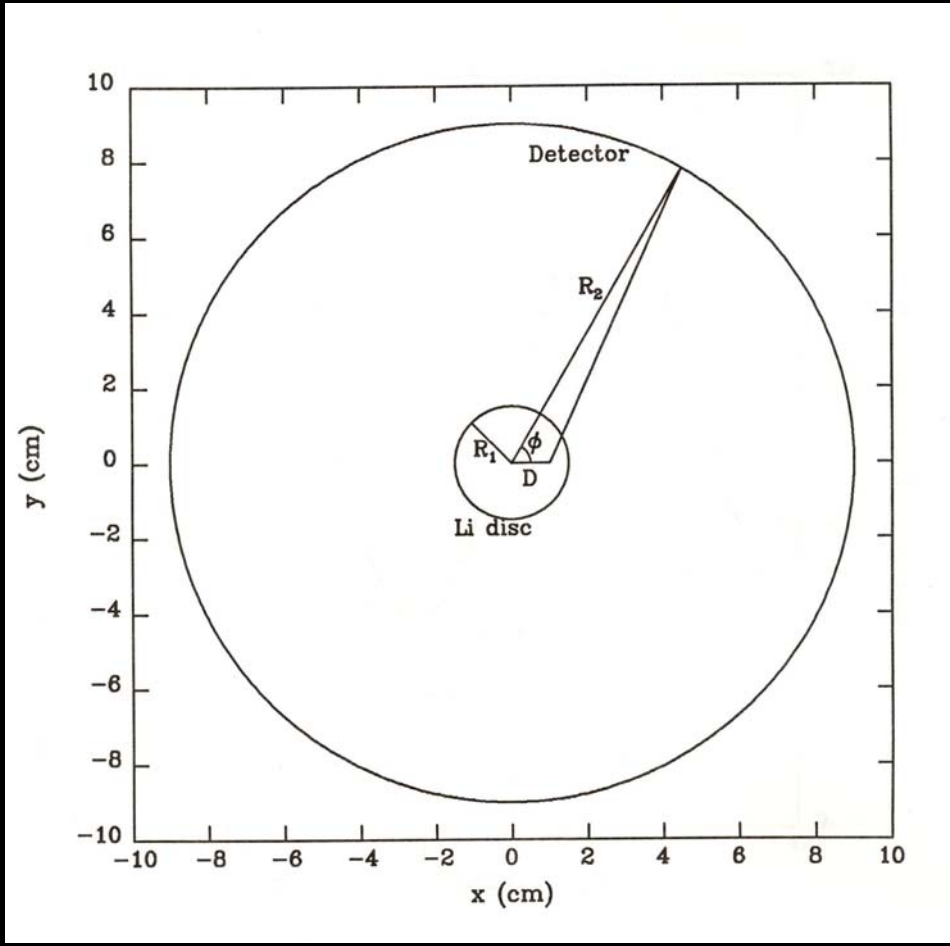

Off-Axis Pointing - 1

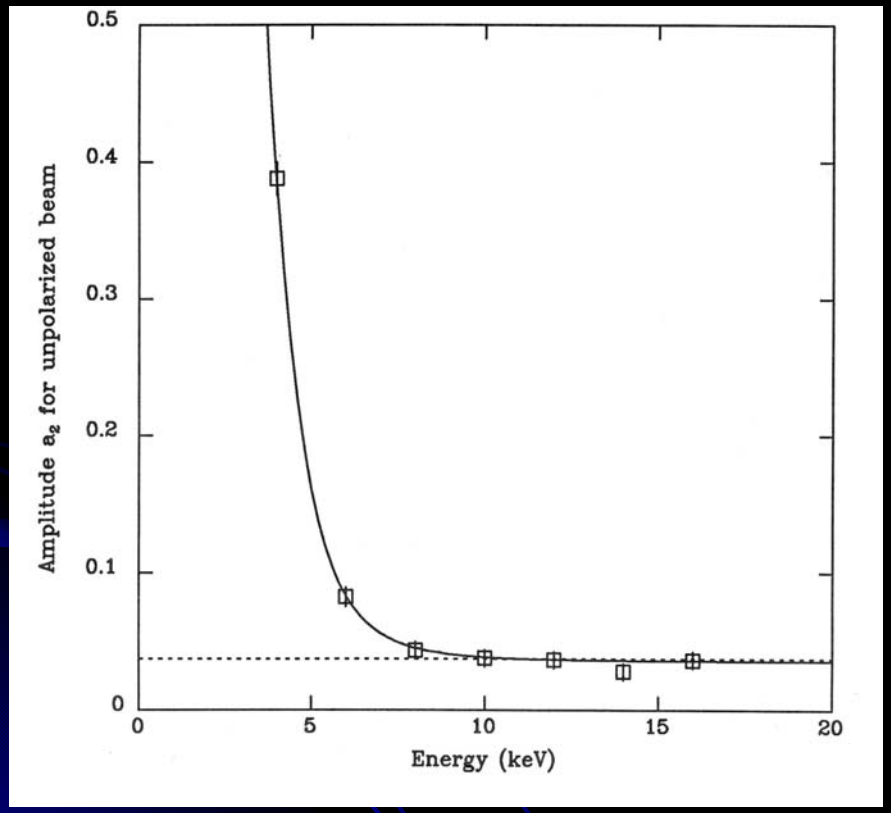

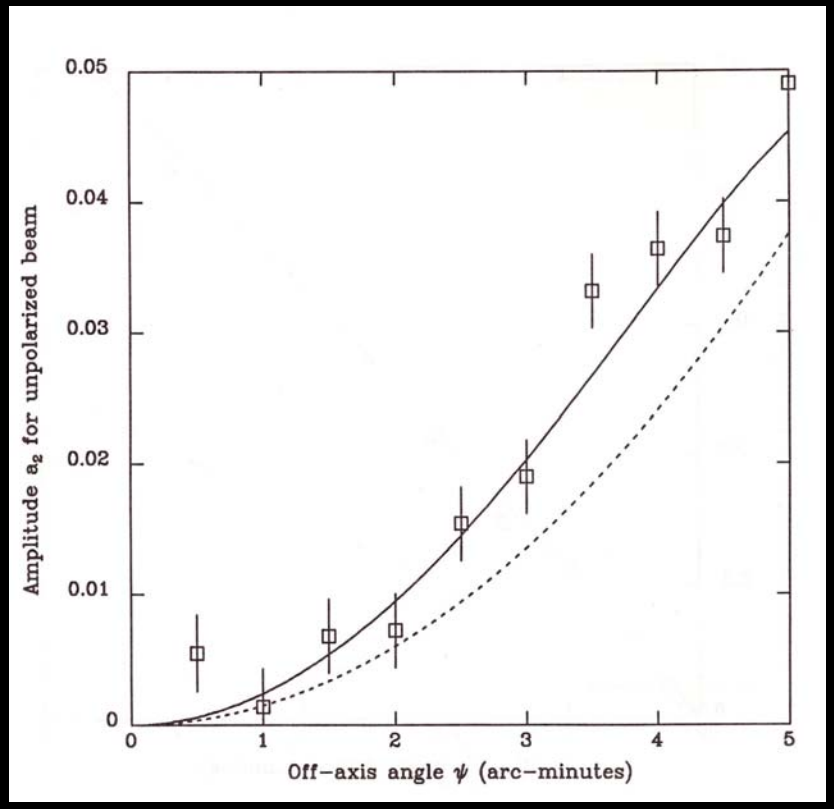

Other Systematic Effects

- Off-axis pointing also polarizes an unpolarized beam
  - Symmetry broken even if the telescope is perfectly symmetric
- Impact of the asymmetries in the telescope
  - Built in quadrants!
  - Leads to a second component at “2ω”
  - Changes the statistics, sensitivity, etc.

New Concepts - XPE

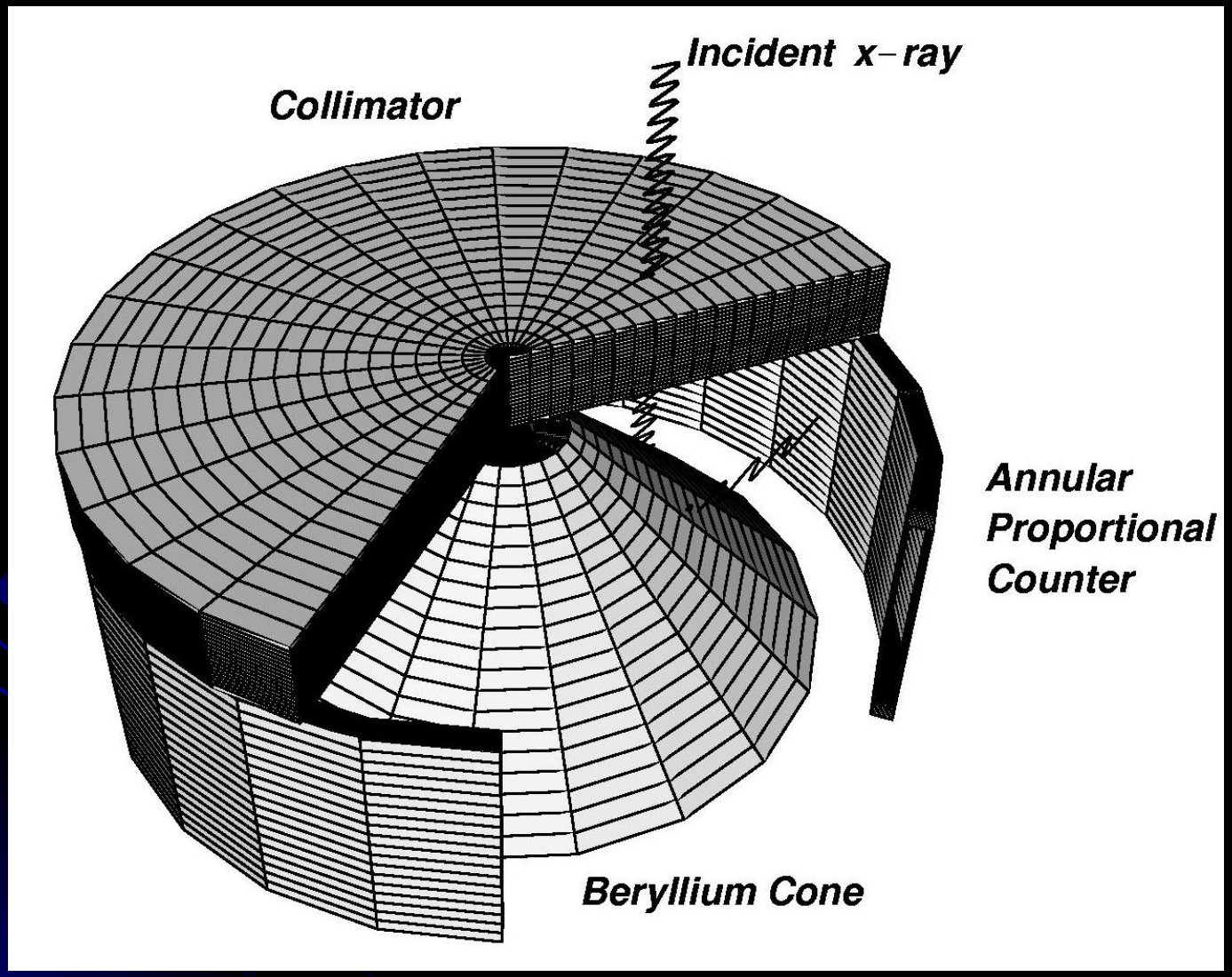

MDP for SXRP & XPE (10^5 seconds)

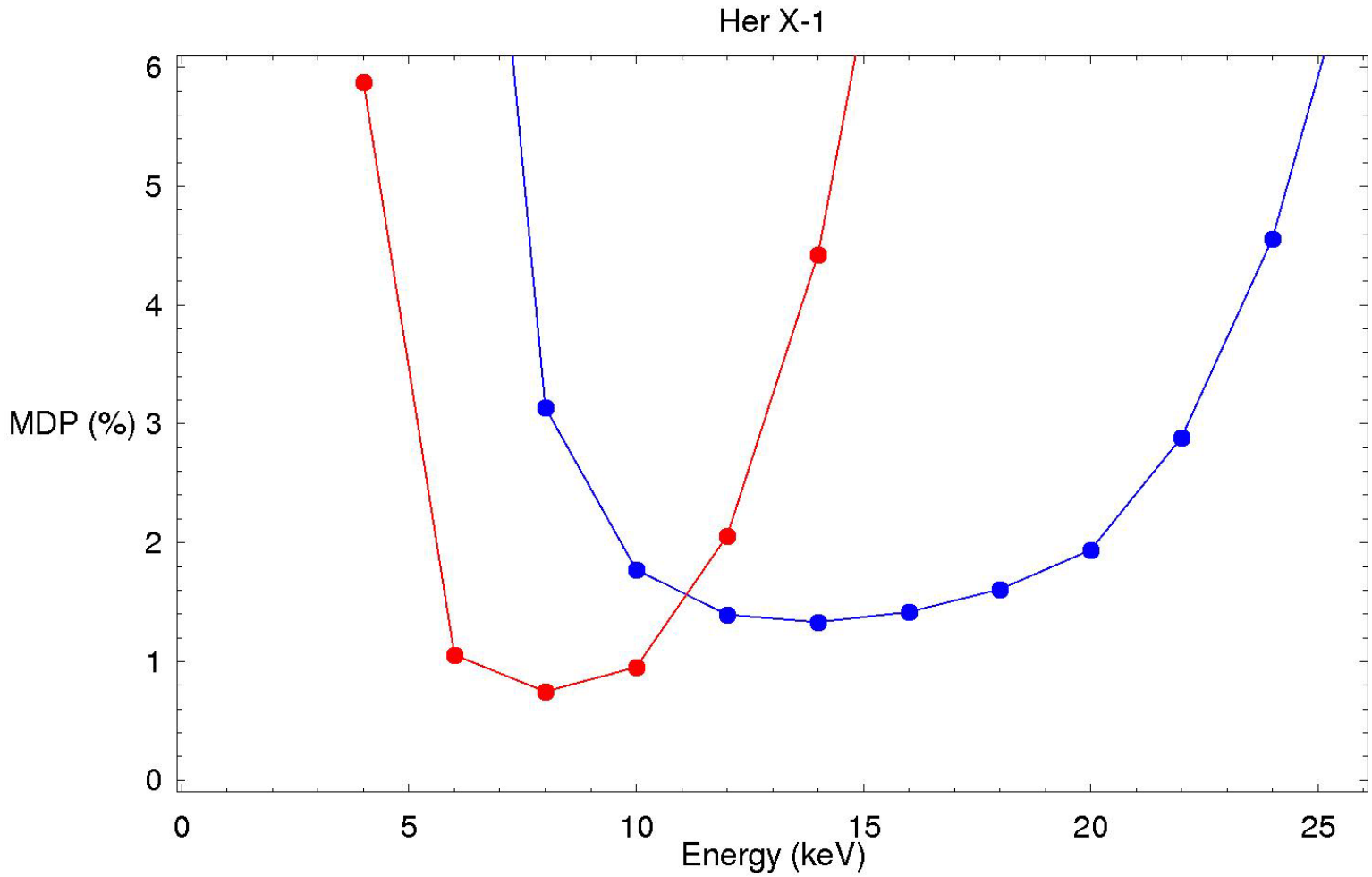

Conclusions

- Inherently broad band
- Based on sound physical principles
- Have been built and flown
  - Worked as predicted
- Relatively inexpensive