NATIONAL ENERGY TECHNOLOGY LABORATORY

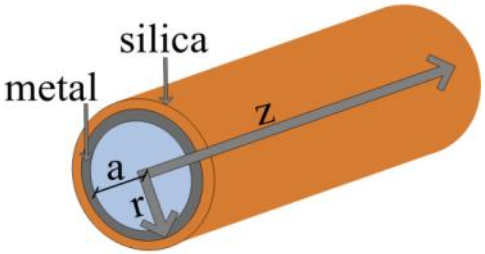

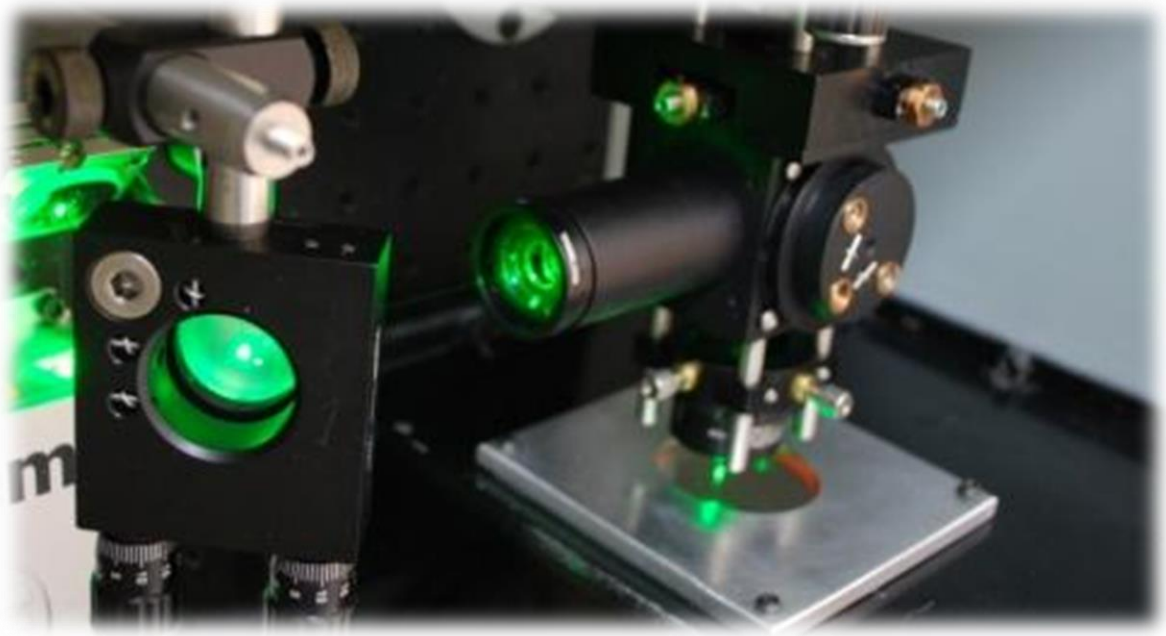

Engineering Laser Safety into the Raman Gas Analyzer for Industrial Applications

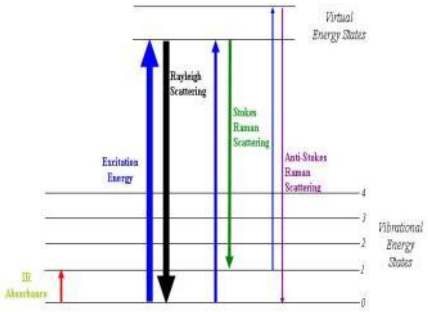

Michael P. Buric, Steven D. Woodruff,

Benjamin T. Chorpening, and Jessica C. Mullen

LSO Workshop Sept. 2013

Explore Laser safety by example: NETL Raman gas analyzer

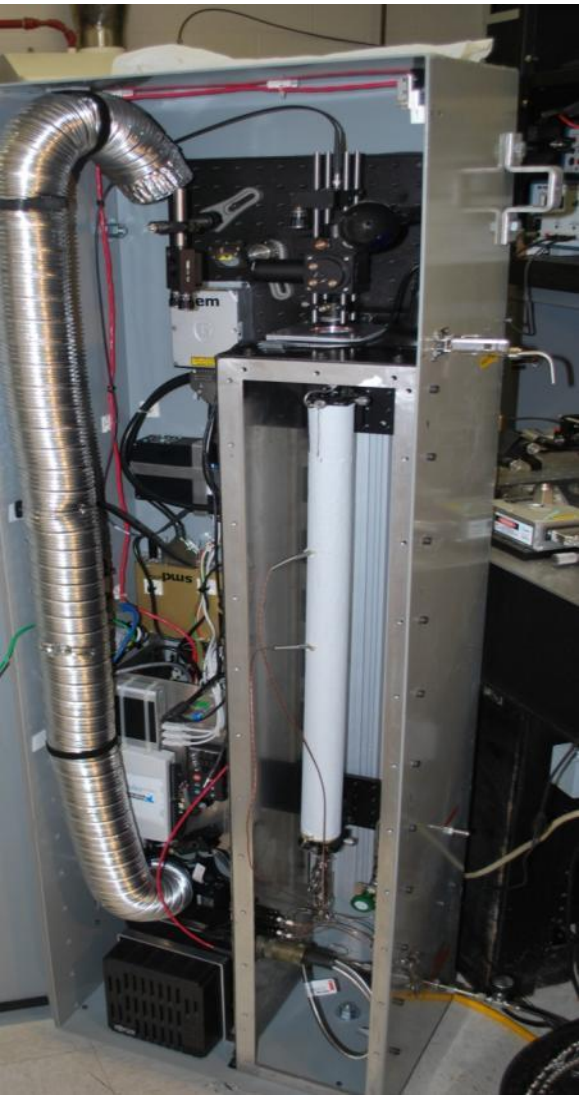

- Instrument capabilities / Review of core technology
- Laser beam personnel hazards
- Laser beam ignition hazards
- Flammability and Area Classifications
- Hardware/Instrument safety features
- Software implemented safety features

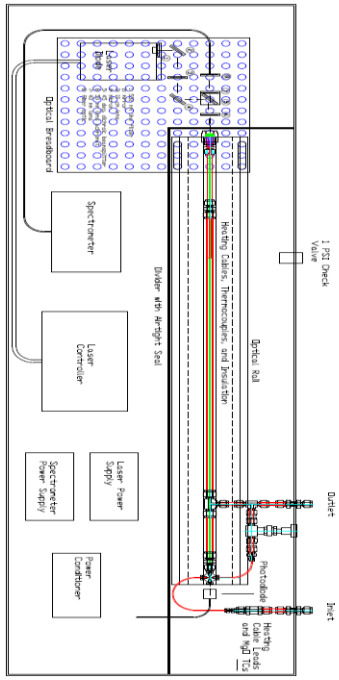

NETL Raman instrument capabilities

- Measure various gas streams of interest
- Natural gas component analysis (methane, ethane, propane, butane, etc.)
- Homonuclear diatomic measurements (N_2, H_2, O_2)
- Real-time (<1second) continuous measurement
- Turbine or other dynamic system control
- Replace GC analysis at similar (or lower) cost
- Provide continuous monitoring with little human input
- Operate from 5-800psig (fuel pipelines, etc.)
- Maintain a high-level of user safety

Review: Waveguide-enhanced Raman

$$P_s = KL\Omega_0 P_0$$

P_s/P_0 is very small! (10^{-13} or less)

L can enhance by 10^3 or more

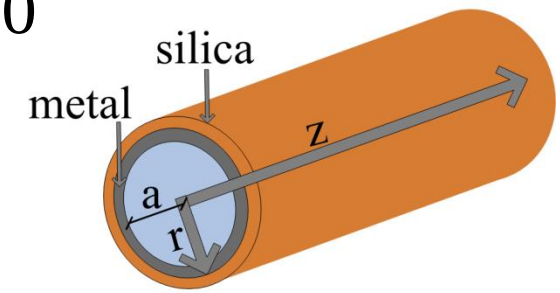

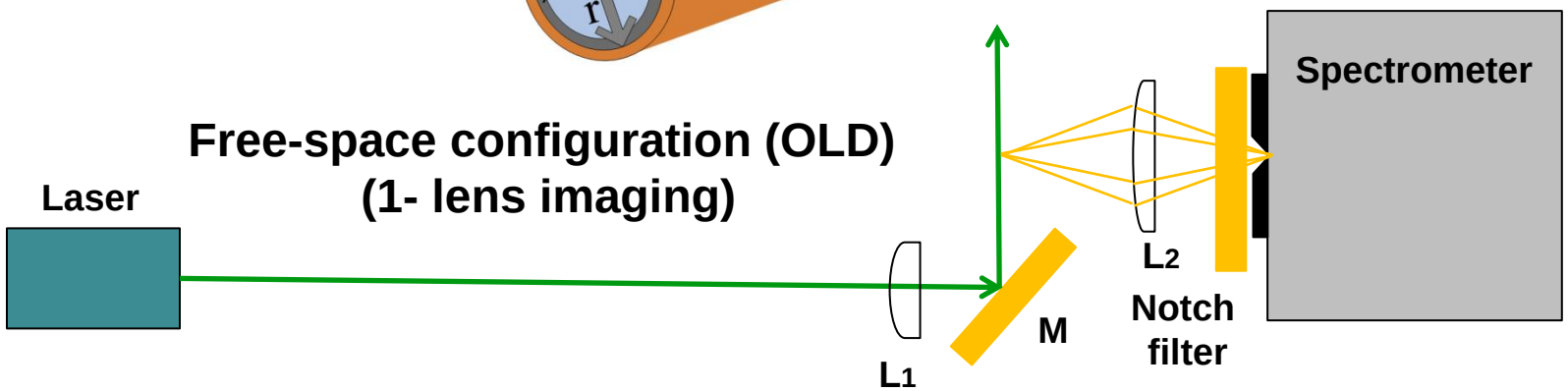

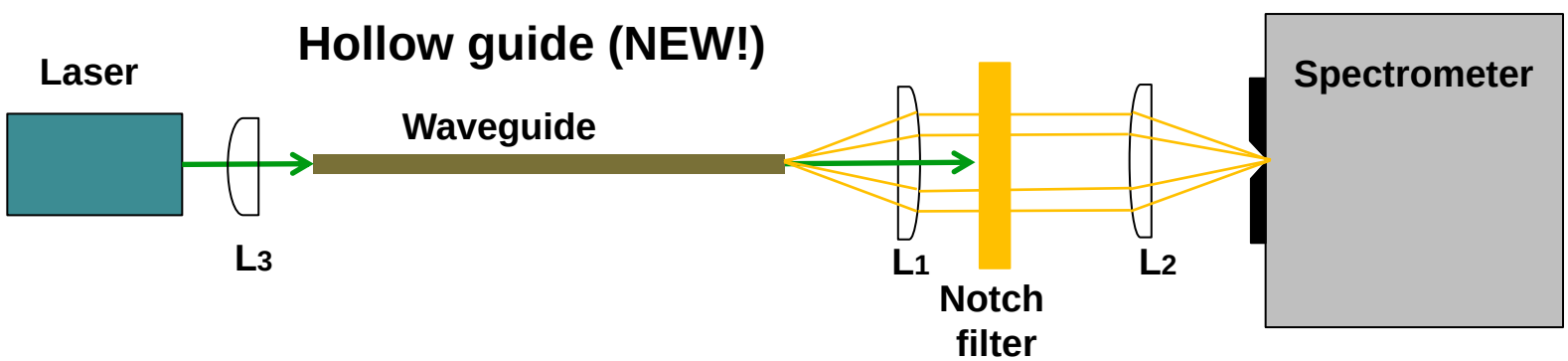

Portable unit internal components

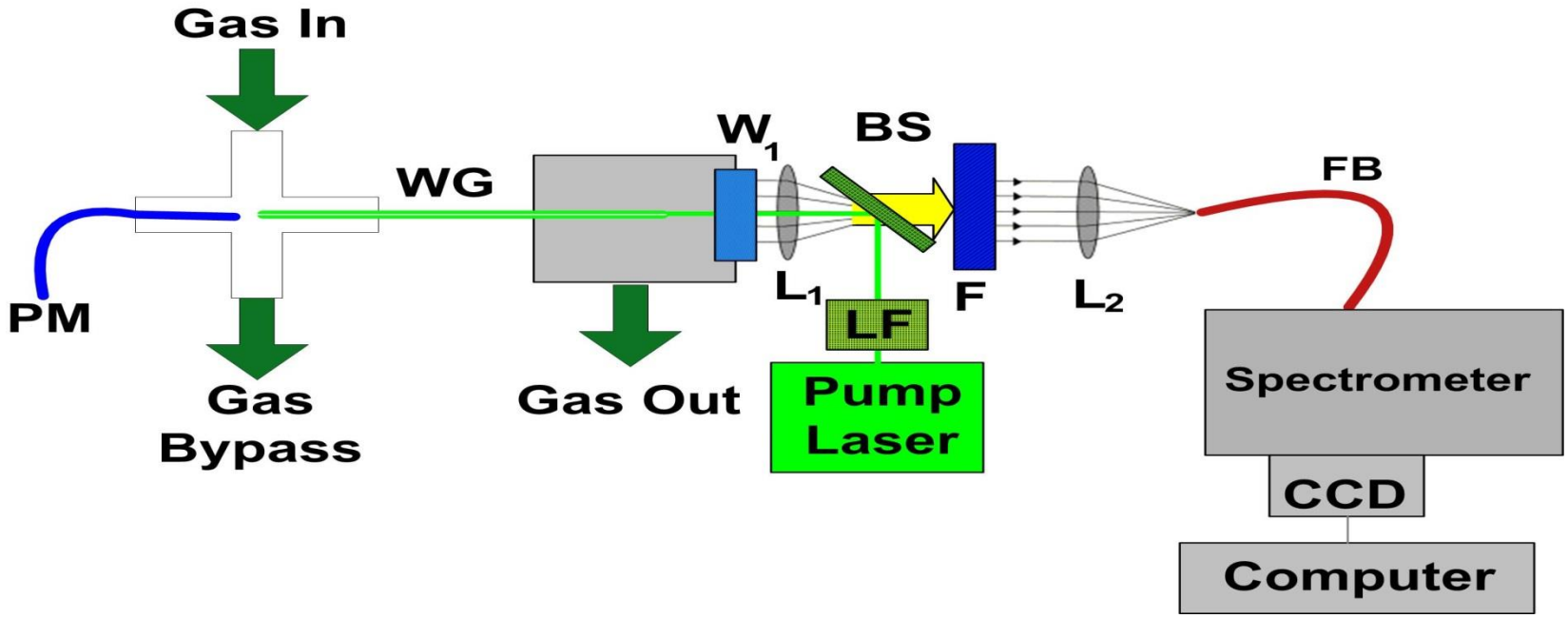

- **SPEED: sub-second response time – faster than GC (minutes), and electrochemical (tens of seconds) – for engine control, process optimization, etc.**
- **ACCURACY: Sub-percent for all species with little cross sensitivity – unlike FIDs and others, differentiate isotopes**
- **SIMPLICITY/STABILITY: Obtains all species (with N_2 H_2 and O_2) at once with no tunable lasers (i.e. better than TDLAS)**
- **SINGLE CALIBRATION: once during commissioning with pure gasses**

Laser personnel hazards

- **~150mW (maximum), 532nm pump laser**
  - Class 3b device (Laser Quantum GEM)
  - High power can injure a person
  - Untrained equipment operators use the system
  - Instrument may be opened for service
- **Solution: Interlock for Class 1 operation**
  - Use a laser with interlock input (GEM ok)
  - Interlock the enclosure reliably
  - Use best practices for interlock design

Laser beam containment

- Initial design: single enclosure door, 1 interlock switch. Later design: 2 doors, 2 serial interlock switches
- No removable panels. If present, use a warning label
- Class 1 Laser product label on enclosure exterior
- Maintain internal laser aperture emission labels and beam covers for service personnel (good idea)
- Include a high-quality service manual
- Use a fail-negative design

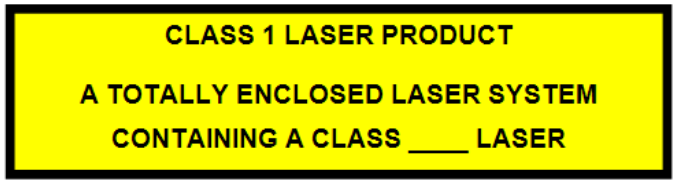

Interlock circuitry best practices

- Loss of interlock power disables laser
- Interlock mechanical relay used
- Relay coil is energized when laser is operating

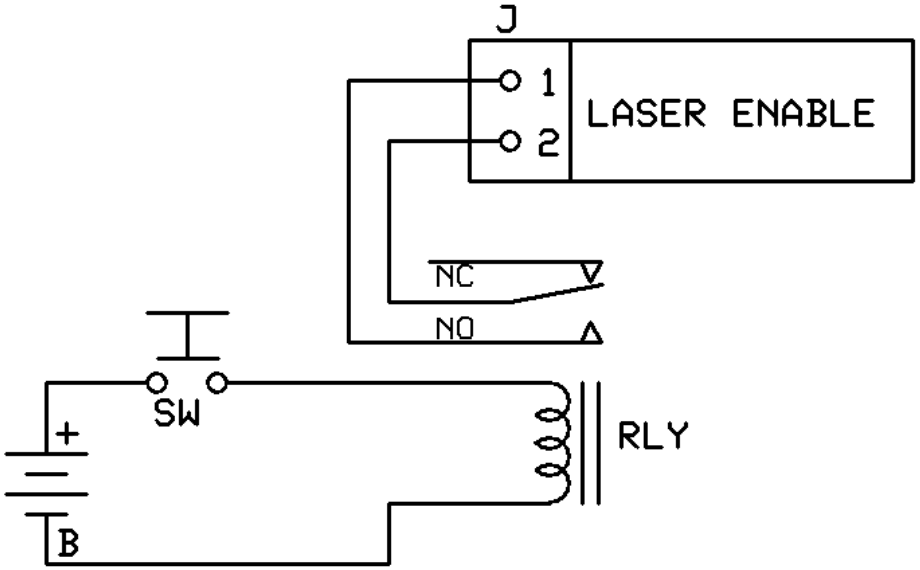

Now that we're saved from blindness – can we also be safe from EXPLOSION?

- Raman instrument regularly measures natural gas
- Enclosure may reside near a pipeline, gas-well, or natural gas-fired power plant
- Laser beam itself is an ignition hazard
- BUT – we have to use the laser in the sample gas or we don't have an instrument

Laser ignition safety

- **How much power can we use?**
- **Are there standards to help decide the worst case?**
  - NFPA 115: Laser Fire Protection
  - IEC 60079: Explosive atmospheres - Part 28: Protection of equipment and transmission systems using optical radiation
- **Determined by flammability or explosivity of mixture**
- **Remember, a mixture is NOT explosive without O_2**

How does an ignition accident occur?

- **Flammable or explosive atmosphere**
  - See fire triangle
  - O_2 must be present
- **High radiant energy present – does not necessarily equal high temperature**
- **Radiant energy required to heat a transparent gas (visible wave) is very large – BUT:**
- **Target particle or surface (absorber)**
  - Small particles can incandesce easily
  - Incandescent particles ignite atmosphere

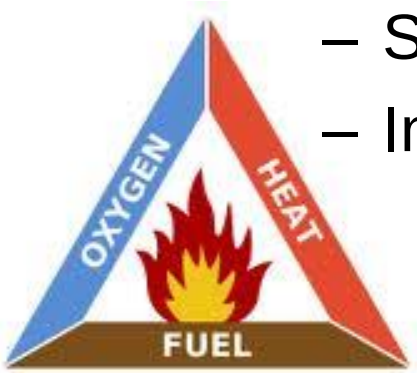

Some auto-ignition temperatures

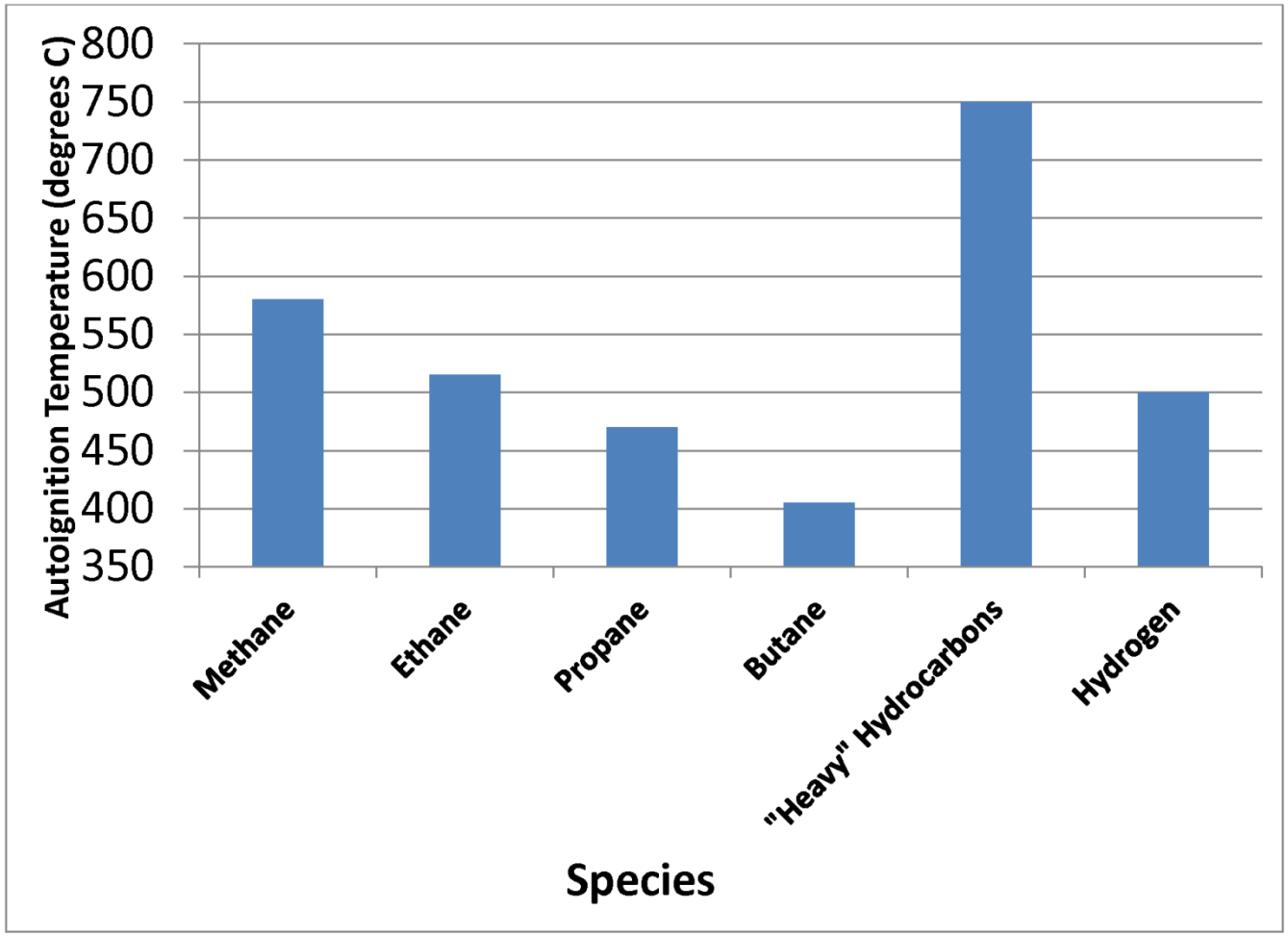

Reasonable power limits for explosive mixtures

- NFPA 115: Not much help – guidance for laser construction, not use
- Research (1990's-2000's): 50mW lowest igniting CW power
- IEC: very conservative, >35mW is an ignition hazard, ~1.4 safety factor
- All pertain to "explosive environments", which exist only in the air atmosphere with a leak, not inside the gas-measurement cell
- We can measure fuel at high power, without Oxygen

Anti-ignition procedures

- Measure mixture at 30mW (safe for all mixtures)
- Is the mixture flammable (O_2 + FUEL)?
- If not, measure at higher power
- If so, warn the user, limit the power, divert the flow

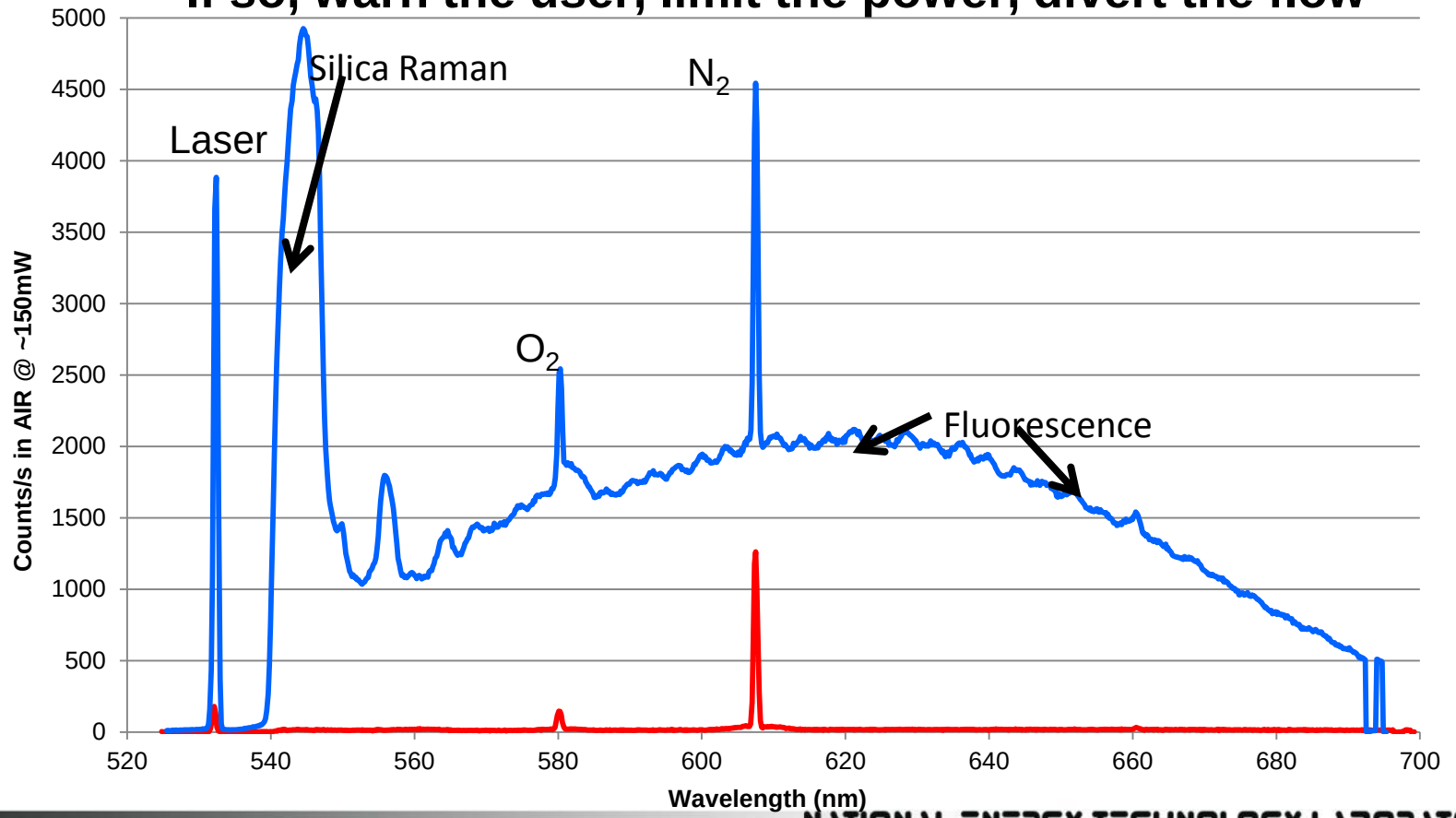

Electrical safety for lasers (NEC)

Summary of Class I, II, III Hazardous Locations			
CLASSES	GROUPS	DIVISIONS	
		1	2
I Gases, vapors, and liquids	A: Acetylene B: Hydrogen, etc. C: Ether, etc. D: Hydrocarbons, fuels, solvents, etc.	Normally explosive and hazardous	Not normally present in an explosive concentration (but may accidentally exist)
II Dusts	E: Metal dusts (conductive,* and explosive) F: Carbon dusts (some are conductive,* and all are explosive) G: Flour, starch, grain, combustible plastic or chemical dust (explosive)	Ignitable quantities of dust normally are or may be in suspension, or conductive dust may be present	Dust not normally suspended in an ignitable concentration (but may accidentally exist). Dust layers are present.
III Fibers and flyings	Textiles, wood-working, etc. (easily ignitable, but not likely to be explosive)	Handled or used in manufacturing	Stored or handled in storage (exclusive of manufacturing)

What Area Class is it?

Laser head and power supply area: MUST BE UNCLASSIFIED !

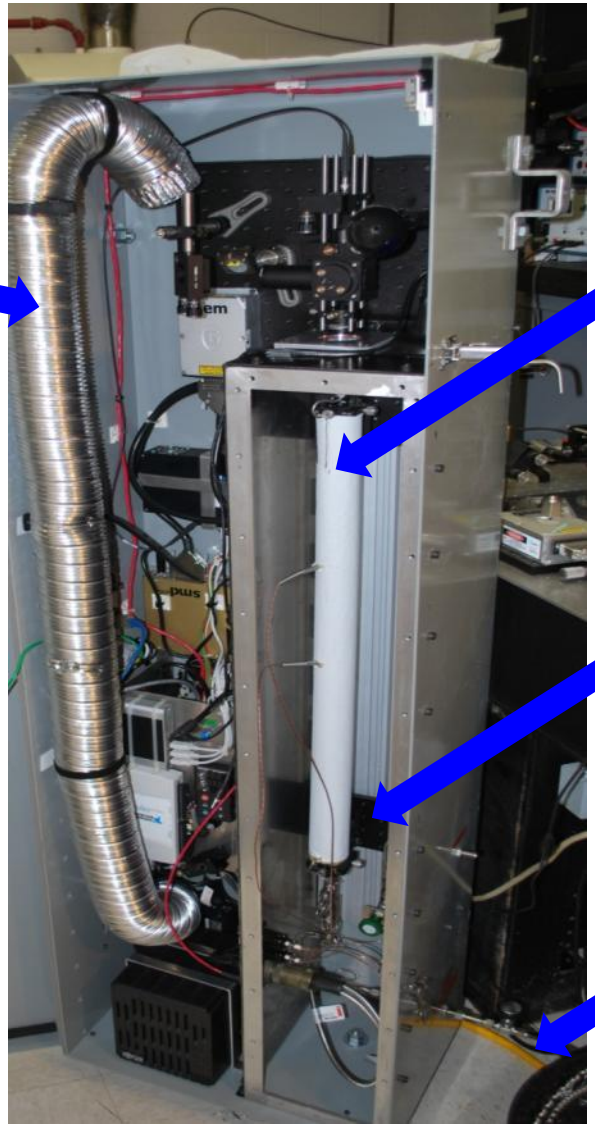

Inside the gas cell: Class 1, div. 1 – can be flammable under normal conditions

Immediately outside the gas cell: Class 1, Div.2 – can be flammable if there is a leak

Outside the instrument: Class 1, Div. 2 – can be flammable if there is a leak

WHAT DO WE DO?
-Lots of "unrated electrical equipment"
- Impossible to find an explosion proof laser

Solution to NEC Classification problem

Instrument enclosure "divider"
- Multiple compartments form a "second seal" (blue line)
- Low pressure windows (<1psi OK) allow light coupling
- Purge and Pressurize!
- Next: use of Type Z purge and pressurization systems

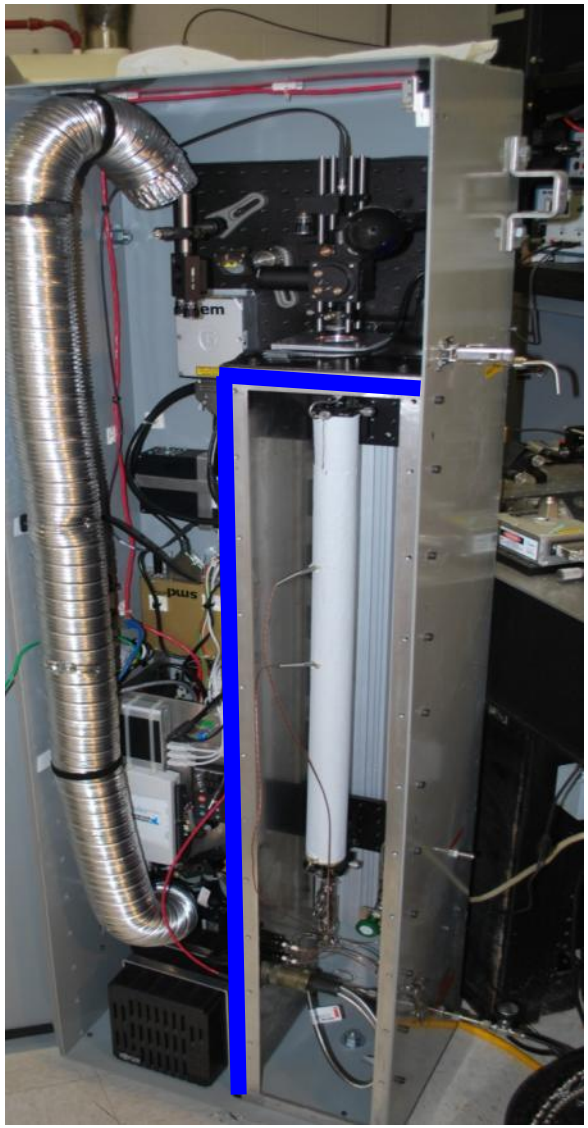

Type Z purge and pressurization

- Compressed air or nitrogen is forced into the enclosure
- Enclosure is “Purged” at startup to remove flammable gasses
- Enclosure is “Pressurized” after the purge to keep flammable gasses OUT.
- Pressurized area is monitored during use
- Monitored area is considered “unclassified” (YEAH!)
- Now we can use any electrical equipment!

Type Z Purge and Pressurization

Pressure switch for remote monitoring

Gauge for supply air adjustment (0-150psig)

Gauge for enclosure pressure (few inches of water) – satisfies local monitoring

Warning label: "DO NOT OPEN TYPE Z" etc.

Vents for each enclosure to air

Other notes for Type Z P&P operation

- Seals should be good, but don't need to be perfect as the "flapper valves" are the first to open @ low-p
- No need for "explosion proof" style threads, etc, under positive internal pressure
- Need an external monitoring point with its own power fed to pressure switches
- Need an external alarm to signal "no pressure" and an external disconnect
- Warning labels!
- Everything external is still C1D2 (air conditioner, lights, switches, etc.)

Other safety features – gas cell

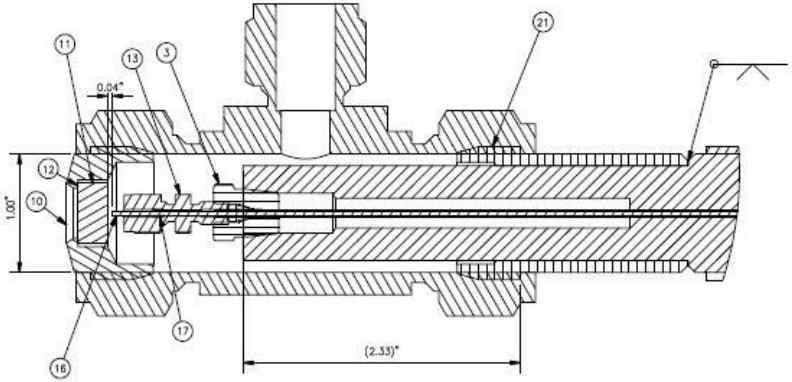

DETAIL A
SCALE 1.5:1

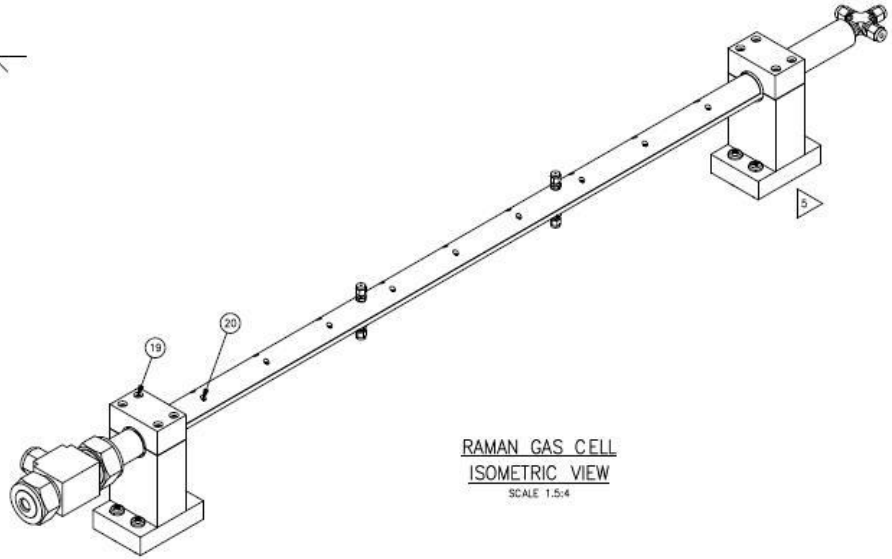

RAMAN GAS CELL
ISOMETRIC VIEW
SCALE 1.5:4

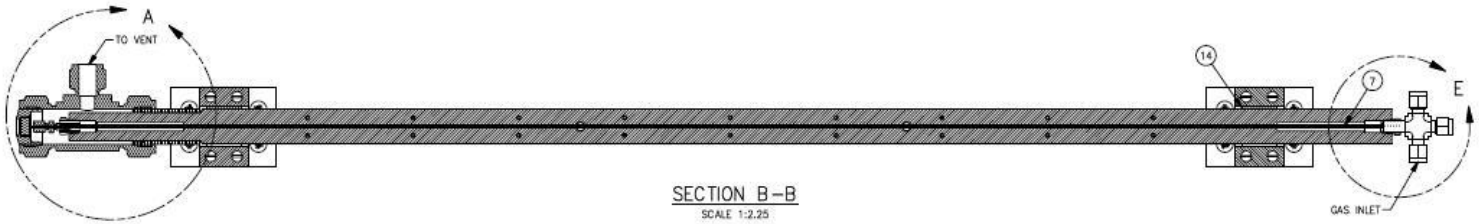

SECTION B–B
SCALE 1:2.25

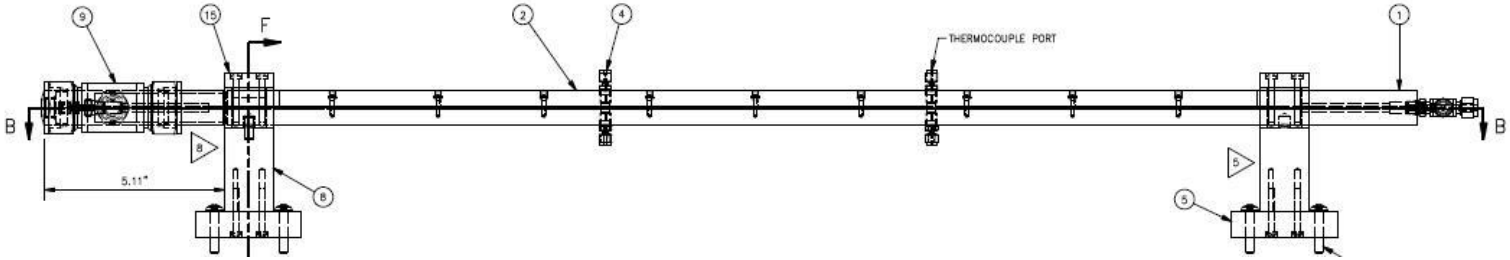

Other safety features – enclosure design

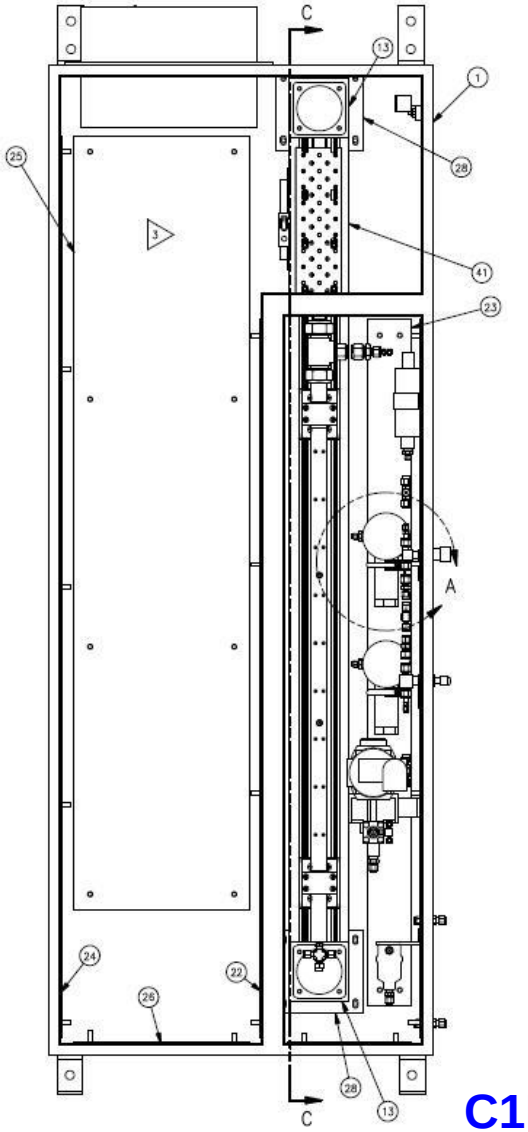

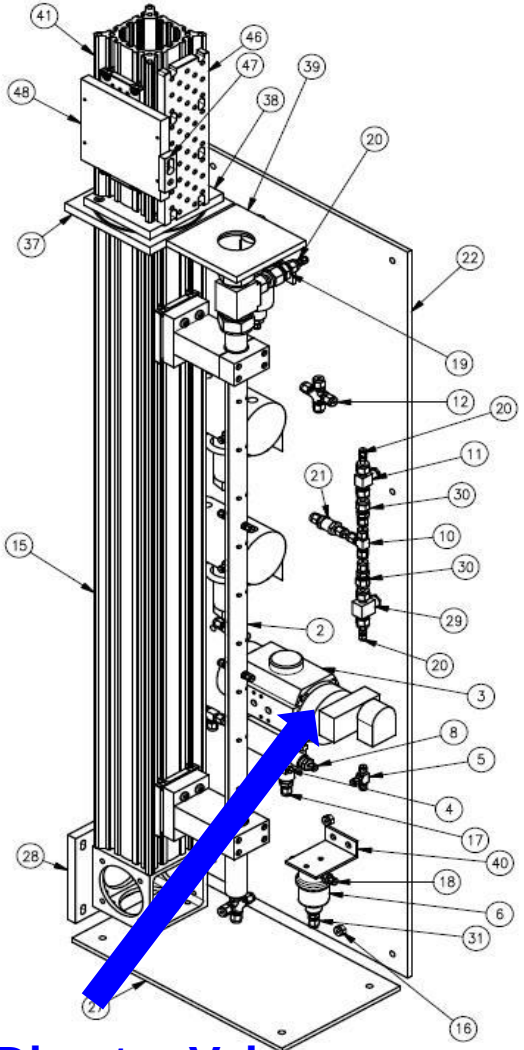

C1D2 Diverter Valve

Explosion safety items

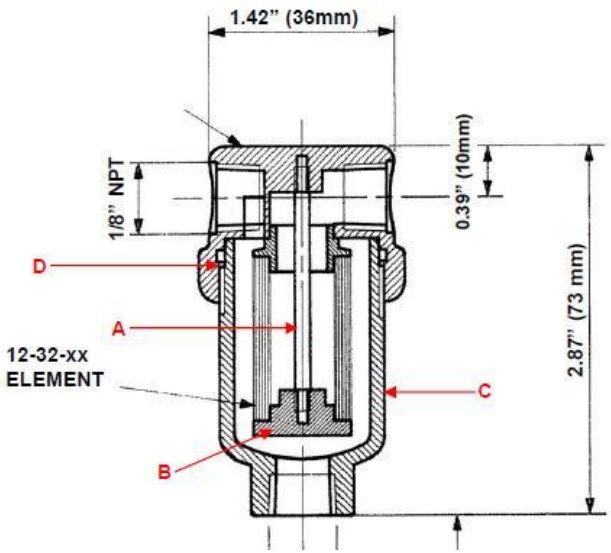

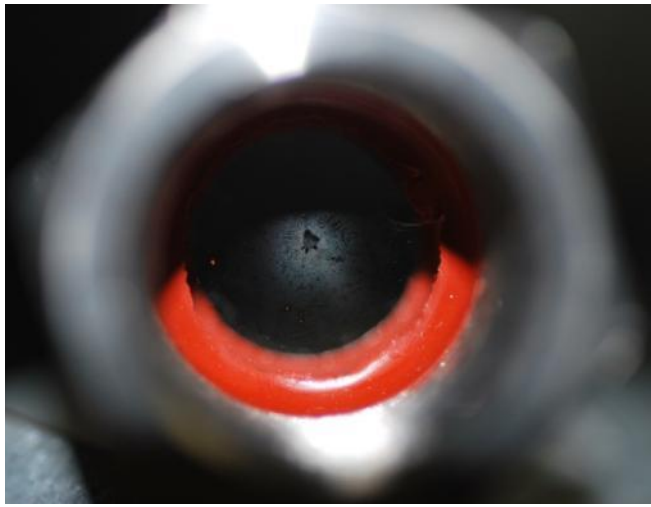

- **Particle contaminants**
  - Filter appreciable particles
  - Filter oils and other liquids
- **Explosive gas streams**
  - Limit power if found to be explosive
  - Divert flow under abnormal circumstances
    - Chemo-luminescence, gas breakdown, etc

Control software with safety features

- **Multi-zone temperature monitoring with shutdown**
- **Diverter valve control**
- **Flammability determination**

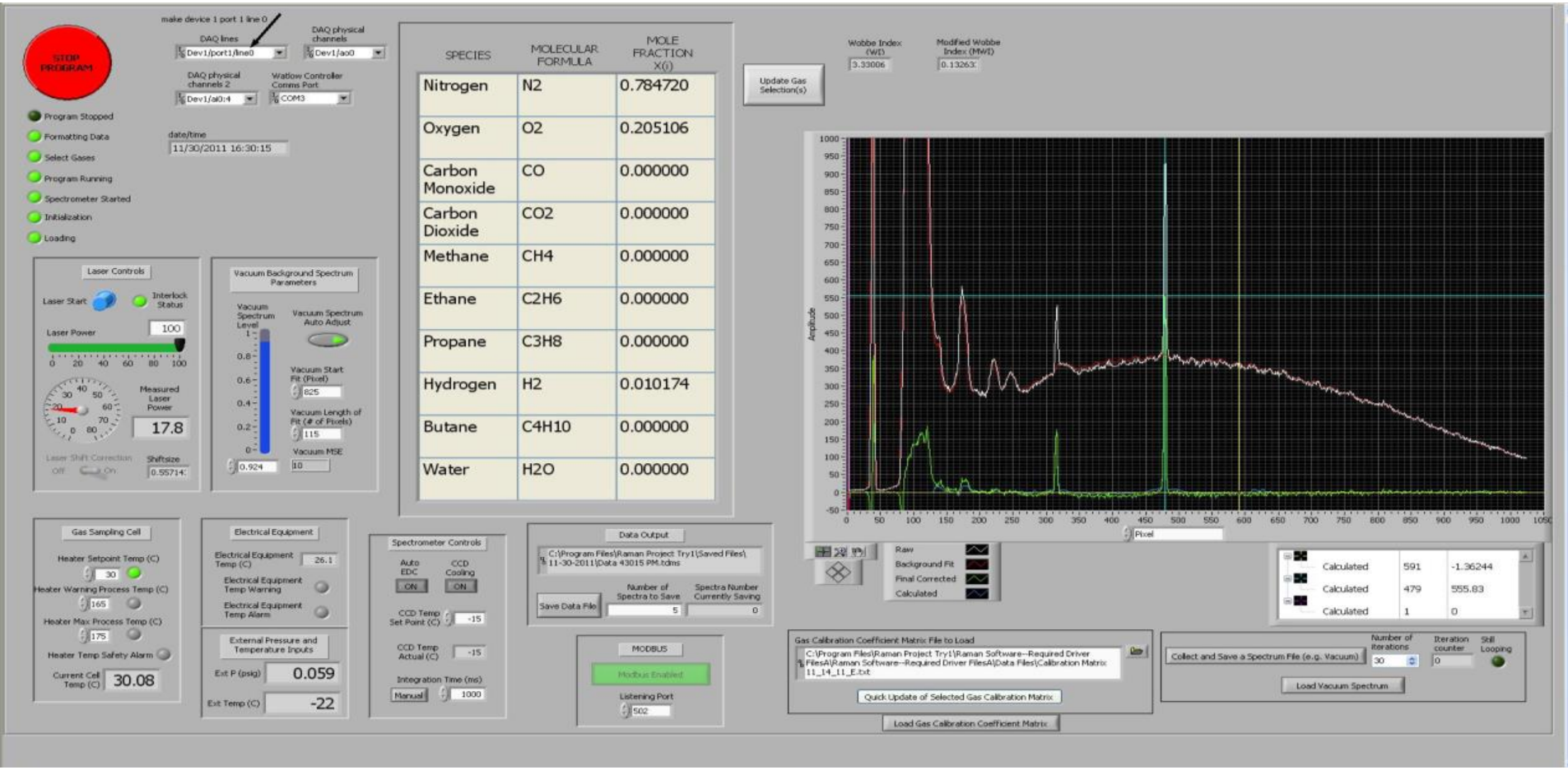

Conclusions

- Making a Class 1 laser research-product can be easy!
- Constructing reliable interlock circuits is a breeze.
- New diagnostic tools will likely use more lasers with higher power.
- High powered lasers can be used in hazardous locations IFF the correct procedures are taken!

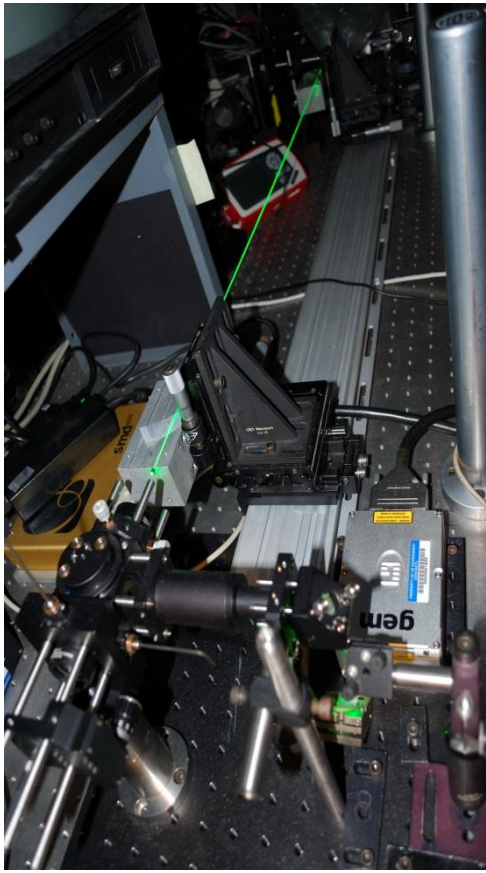

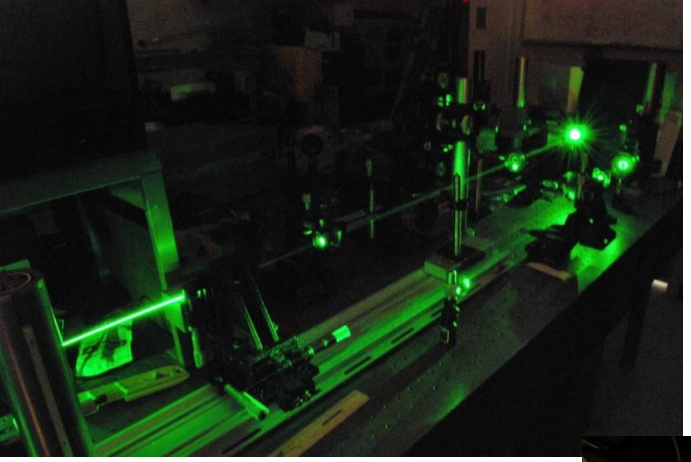

Thank You

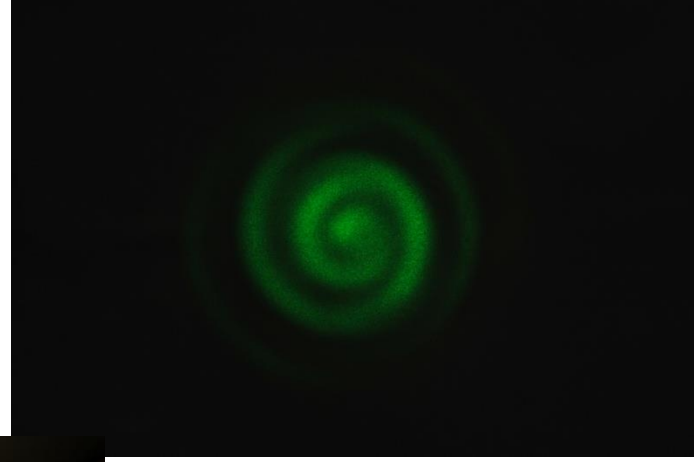

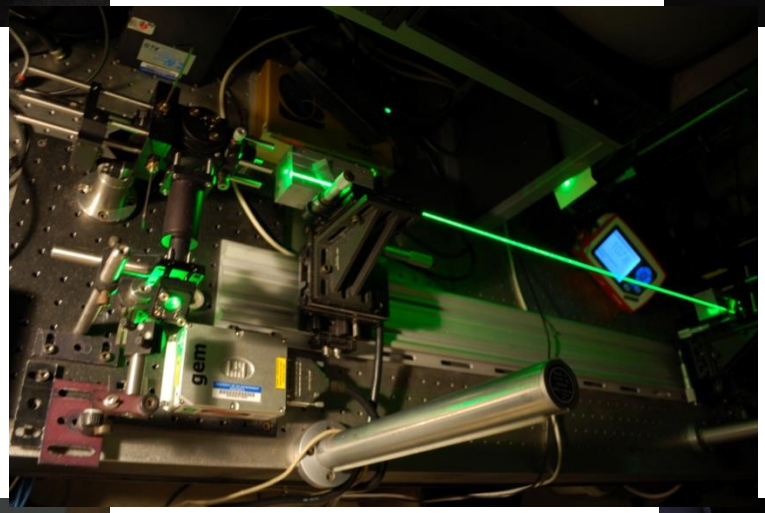

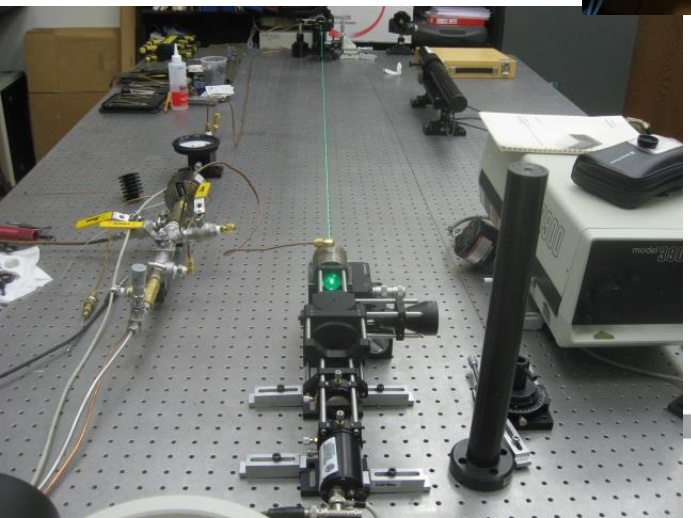

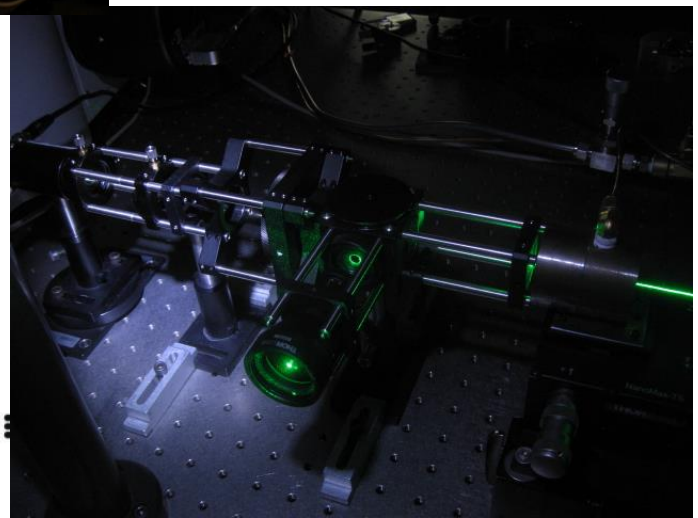

END OF SLIDES

Laser-launch conditions

$$\alpha_{1m} \cong \frac{u_{1m}^2}{K^2R^3} * Re\left(\frac{\frac{1}{2}(v^2+1)}{\sqrt{v^2-1}}\right.$$

$$\theta_{1m} \cong \frac{u_{1m}}{K * R} \qquad K = \frac{2\pi}{\lambda}$$

Mode # (m)	u_{1m}	θ_{1m}(degrees)	α_{1m}(per meter)	Throughput (%)
1	3.83	0.116	0.00188	99.62
2	7.02	0.213	0.00631	98.75
3	10.17	0.308	0.013	97.43
4	13.32	0.404	0.0227	95.56
5	16.47	0.499	0.0347	93.30

$v \cong 0.13+3.19i$ @ 532nm

$\Theta_{max} = 0.52°$

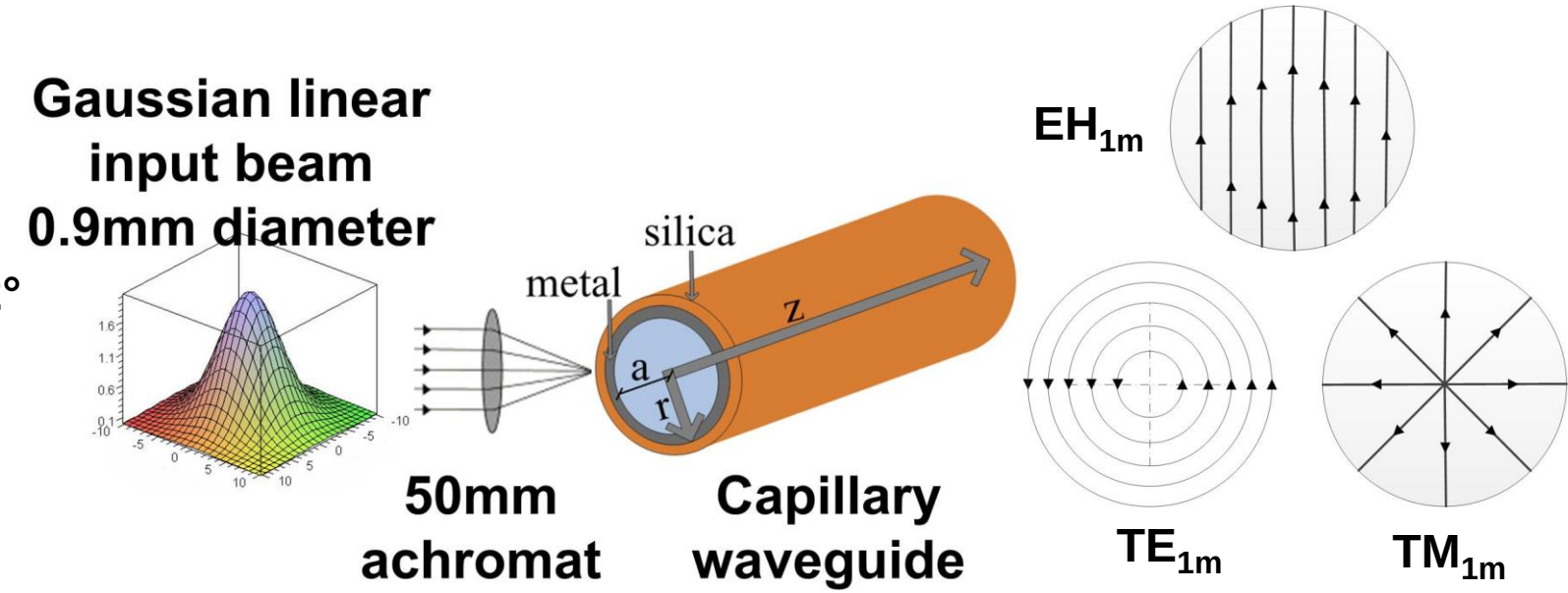

Plumbing for quick sampling

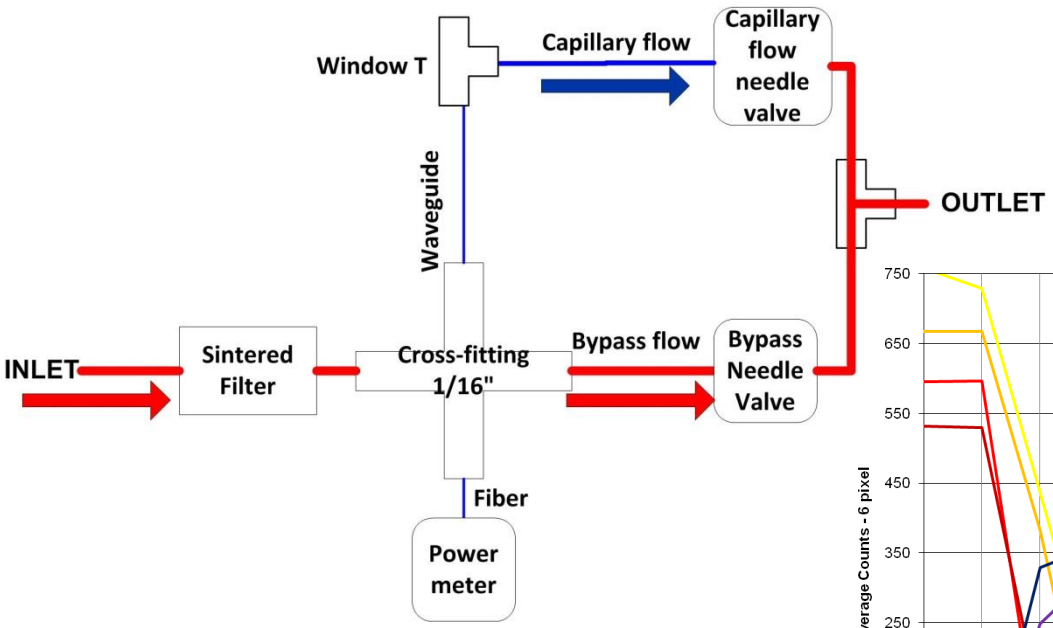

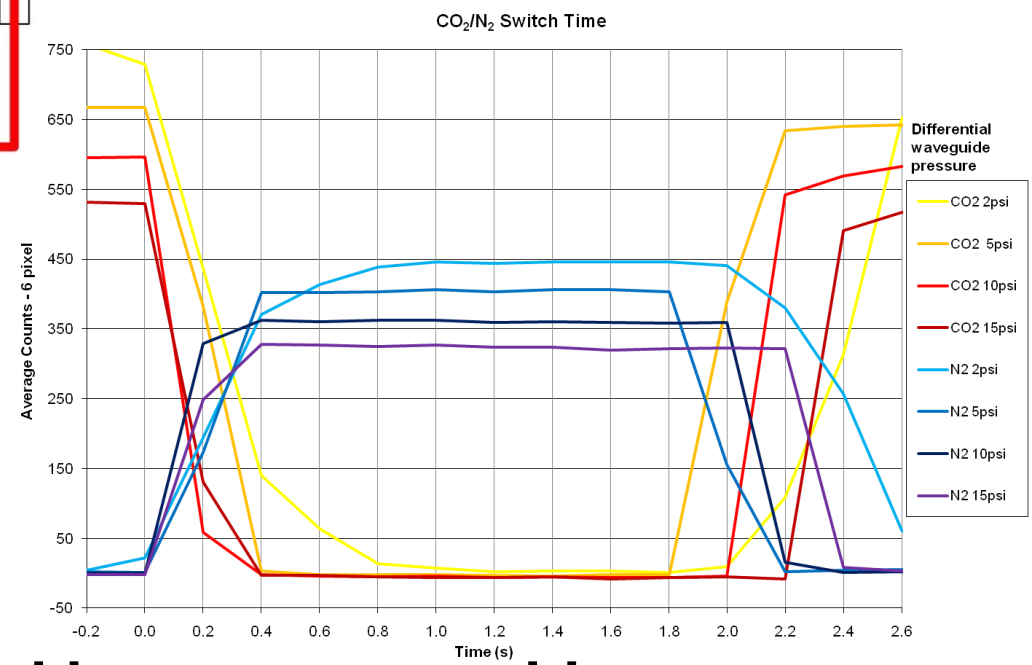

- **Bypass flow determined by upstream tubing and sample rate**
- **Capillary flow set for max sample-rate**

Chemometrics

- Spontaneous Raman is linear with concentration
- Error (~<1%) increases with # of species:

$$[G] = [C]^{-1}[M]$$

- [C], the calibration matrix, contains spectra of pure gasses
- Error mostly a result of background subtraction (commercial capillaries)
- Initial calibration only unless more gasses are added

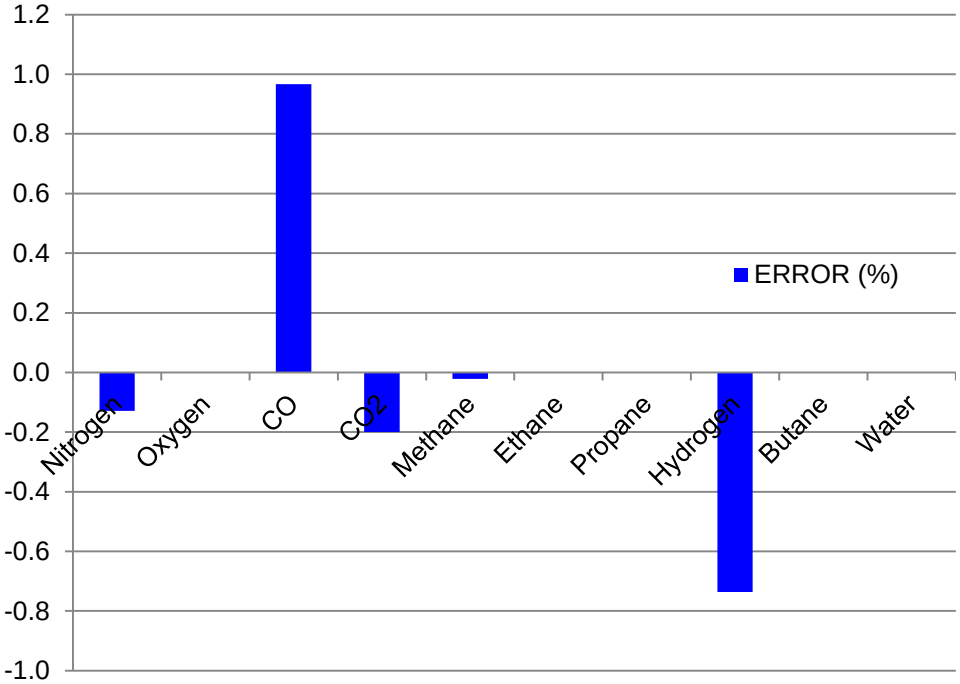

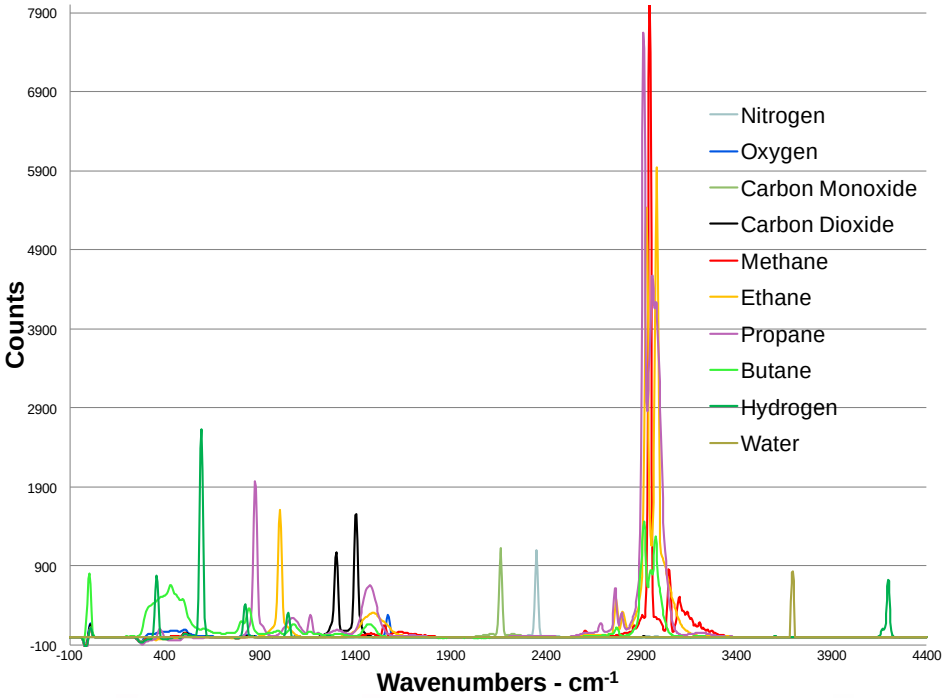

Capillary waveguide improvements

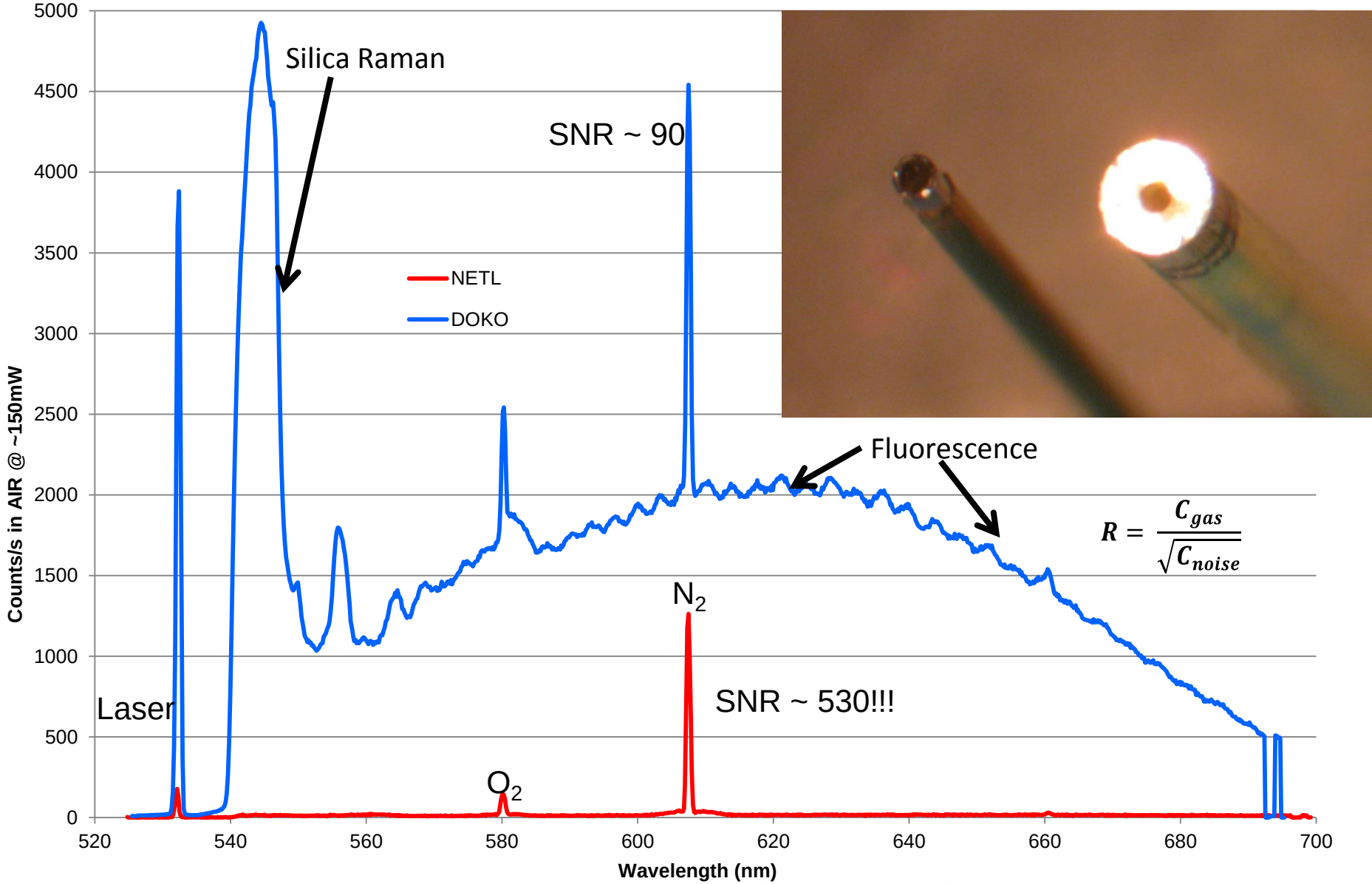

New Improved Capillaries

- Ag/polymer lined fused-silica
- Wet-chemical Tollens reaction
- NETL-designed deposition system
- Gold waveguides also produced (for 785nm)
- Pre-cleaving for end-facet coating
- Custom testing setup

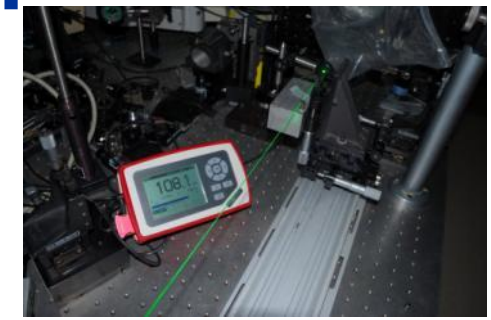

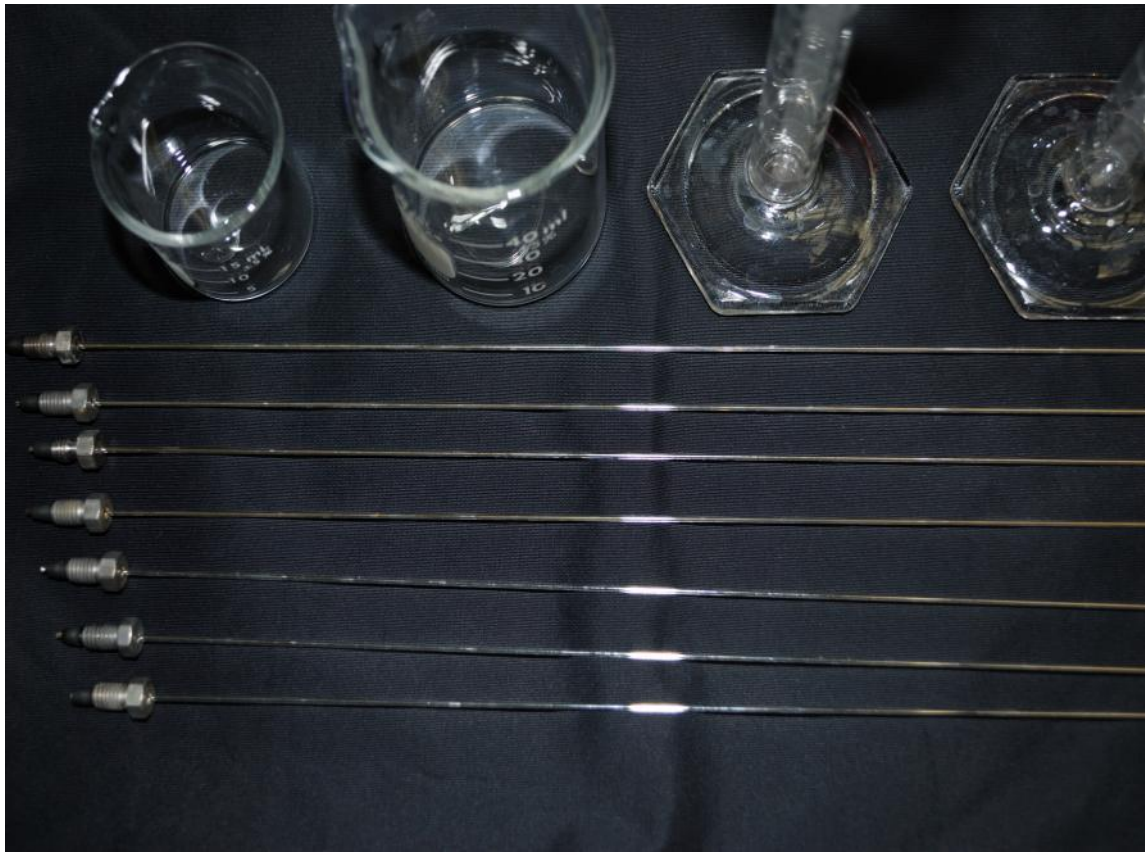

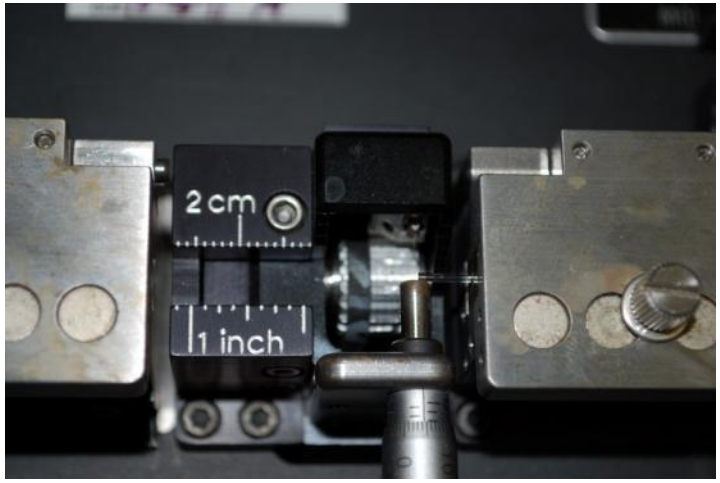

Current Detection Limits Improved ~5.9X

(1s Integration, 100 mW, 1 m Capillary, OO Spectrometer, computed for binary mixtures)

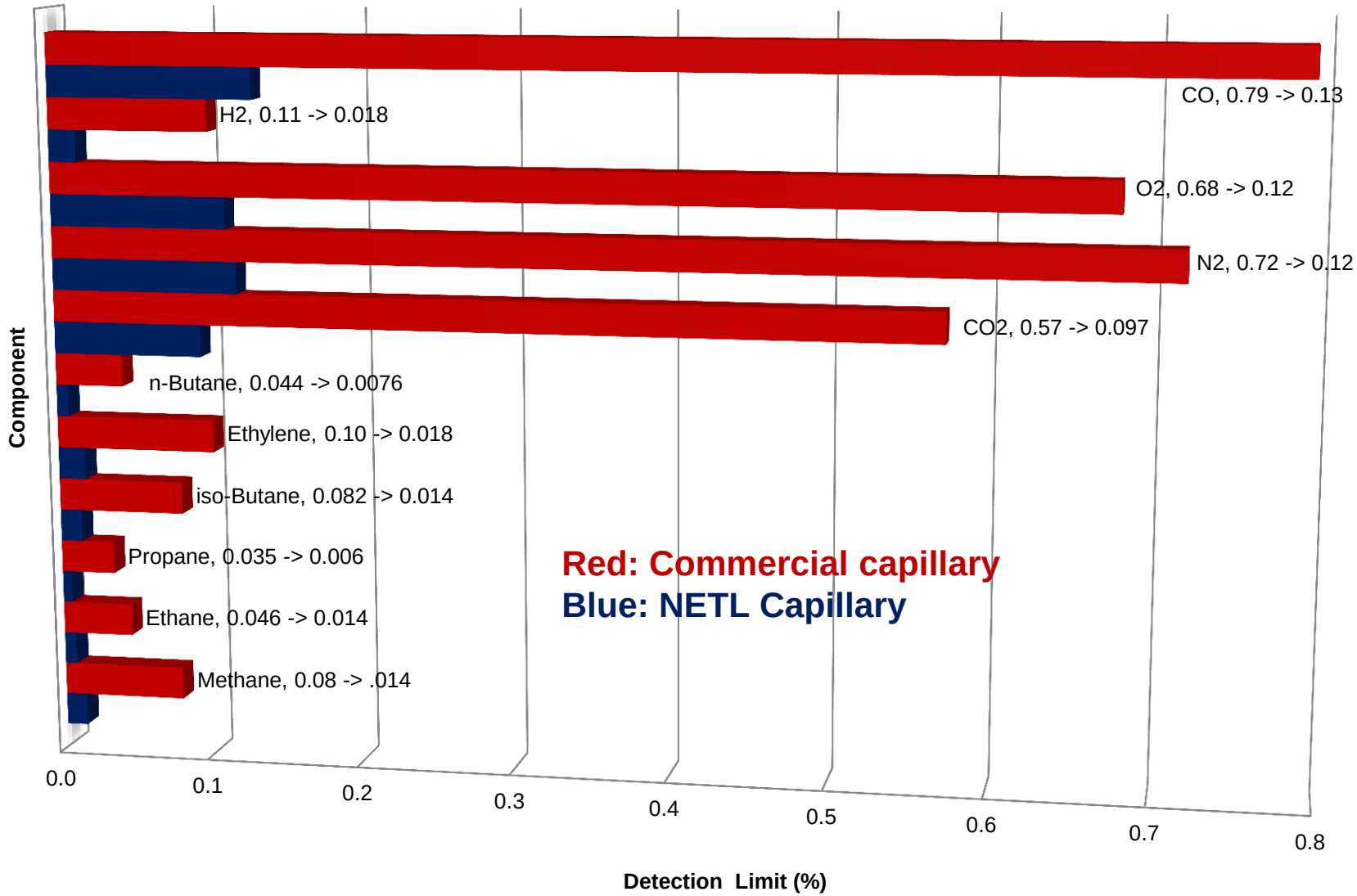

Industrial high-pressure tests

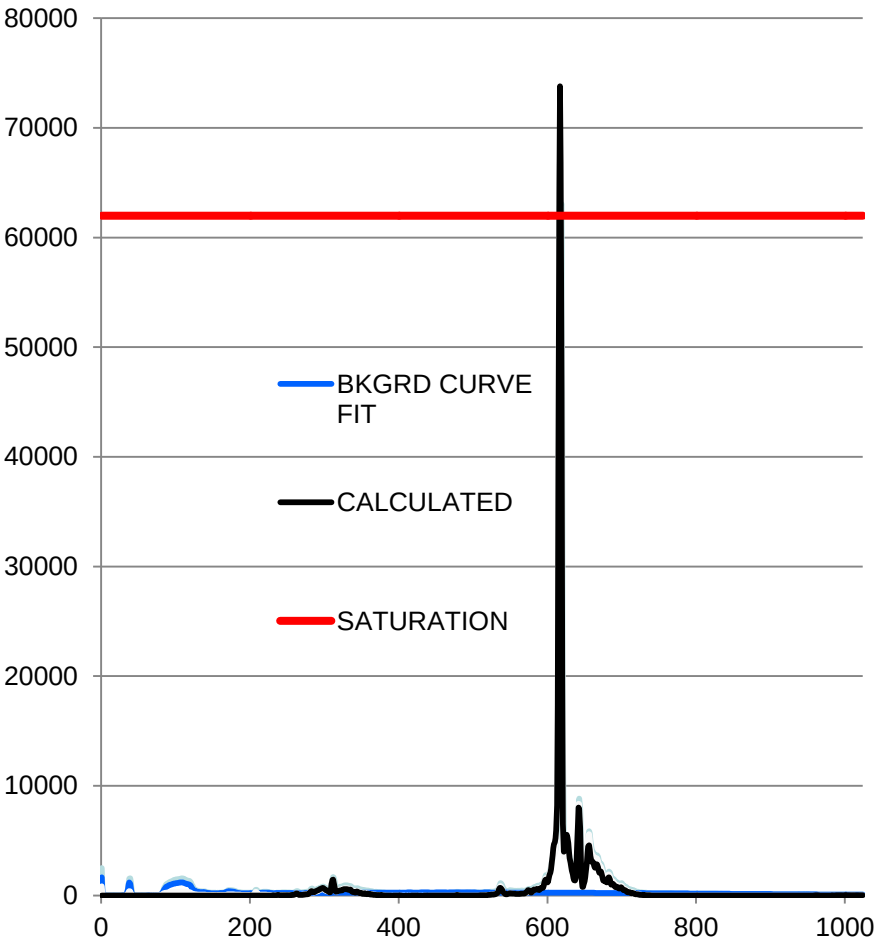

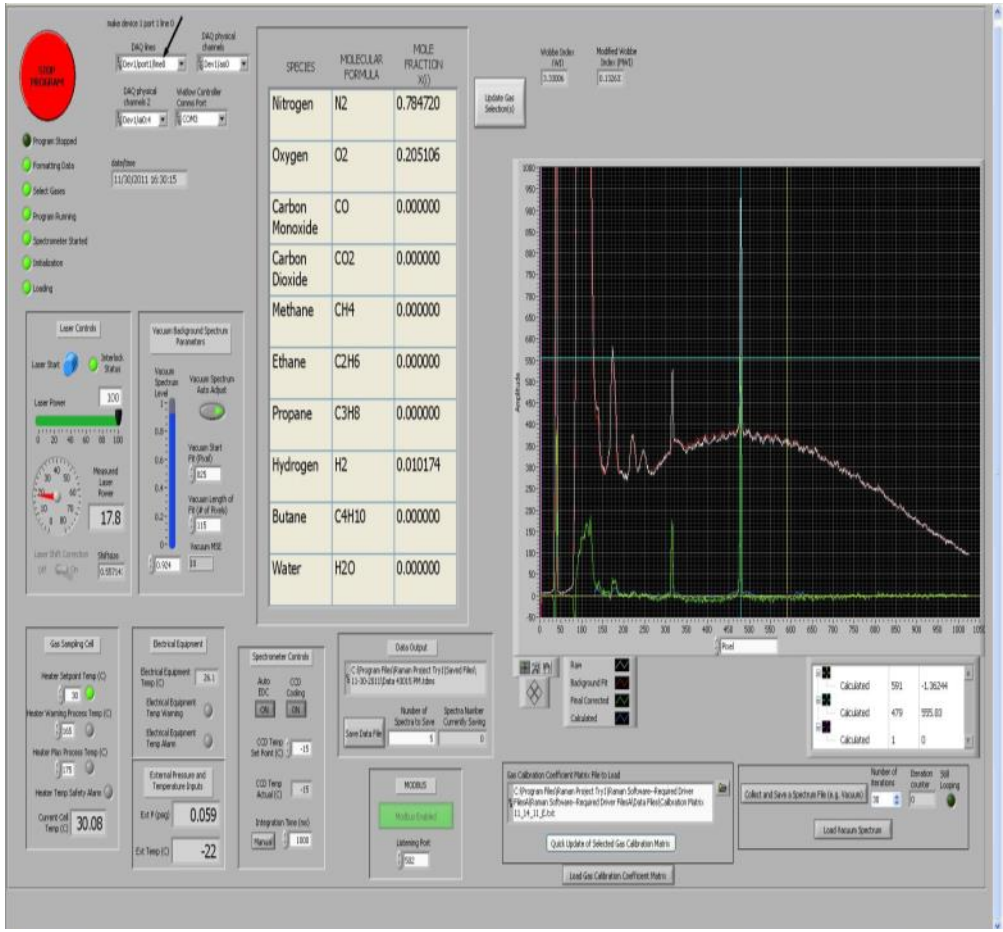

Industrial automation features: laser fitting, intelligent control of heaters and valves, background subtraction, interlocks, saturation detection

Conclusions

- Raman analysis of gasses can be done very quickly, replacing other equipment
- Sub-percent accuracy, repeatability, and detection limits
- Calculations completed in real-time
- Low-noise NETL capillaries facilitate higher accuracy
- Single calibration sufficient
- High pressure gasses readily measured

Future work

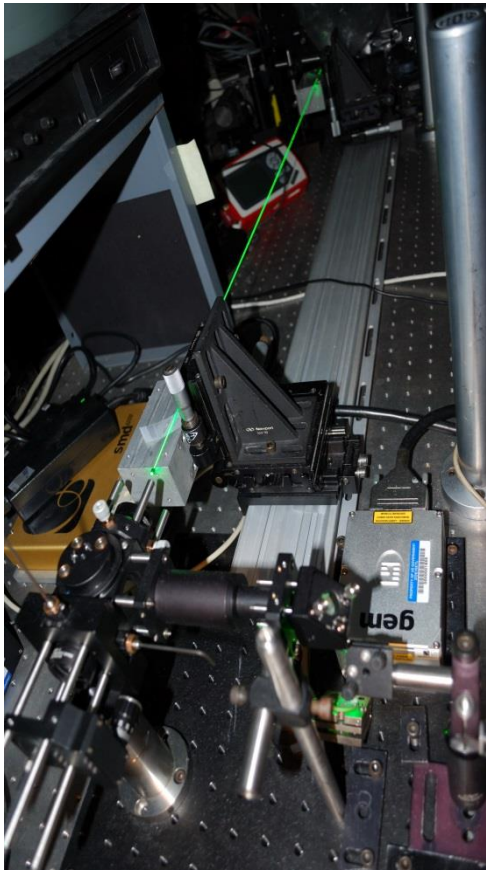

- **Test NETL waveguides for H_2S resistance**
  - Test chamber almost complete
- **Continue to improve waveguides and metal coatings**
  - Possible ~2-10X signal increase for same laser
  - Possible ~2X noise decrease for same hardware
- **Fabricate more GOLD waveguides**
  - Process being refined, some waveguides produced
- **Assemble prototype #2**
  - Most parts are fabricated
- **Conduct extended onsite testing (3-12 weeks)**
- **Control experiment in the Lab Scale Burner facility**
- **Improve calibration facilities (UHP gases, MFCs, high-accuracy temp. and pressure readouts)**
  - Gas delivery system design complete, being fabricated

Recent Publications

- Mullen, J., Buric, M.P., Woodruff, S.D, Chorpening, B., "Azimuthal polarization for Raman enhancement in capillary waveguides", SPIE Photonics West, Feb. 2013
- Woodruff, S.D., "Field tests of the Raman gas composition sensor", Future of Instrumentation International Workshop, October 2012, Gatlinburg, Tennessee
- Biedrzycki, S., Buric, M.P., Falk, J., Woodruff, S.D., "Spectrometer-less Raman detection using rotating tunable band-pass filters", CLEO, May 2012, paper JTh2A
- Buric, M.P. Wooddruff, S.D., Coal World, "NETL Technology Enables Real-Time Coalbed Methane Analysis for Combustion," July 2012
- S. Woodruff, J. Mullen, J. Ranalli, B. Chorpening, M. Buric, "Field testing the Raman gas composition sensor for gas turbine operation", SPIE Defense Sensing and Security, 2012
- Biedrzycki, Buric, Falk, and Woodruff, "Angular output of hollow, metal-lined, waveguide Raman sensors", *Applied Optics* 2011
- Woodruff , Buric, and Falk, "Rapid Raman, On-line, Gas Analyzer for Feed-forward/Feedback Control", 5th Annual Conference on Composites, Materials, and Structures, 2011
- Biedrzycki, Buric, Falk, and Woodruff, (Optical efficiency in metal-lined capillary waveguide Raman sensors", SPIE Symposium on Defense, Security + Sensing 2011
- Buric, Chen, Falk, and Woodruff, "Metal-lined capillaries for gas-Raman enhancement", *Conference on Lasers and Electro-Optics*, 2010
- Buric, Chen, Falk, and Woodruff, "Multimode metal-lined capillaries for Raman collection and sensing", *JOSA B*, 2010
- Buric, Falk, and Woodruff, "Conversion of a TEM_{10} beam into two nearly Gaussian Beams", *Applied Optics*, 2010
- Buric, Chen, Falk, Velez, and Woodruff, "Raman Sensing of Fuel Gases Using a Reflective Coating Capillary Optical Fiber" SPIE Symposium on Defense, Security + Sensing April 15, 2009
- Buric, Chen, Falk, and Woodruff, "Improved Sensitivity Spontaneous Raman Scattering Multi-Gas Sensor", *Conference on Lasers and Electro-optics* 2009
- Buric, Chen, Falk, and Woodruff, "Improved Sensitivity Gas Detection by Spontaneous Raman Scattering", *Applied Optics*, 2009

Calibrations – critical for calculation

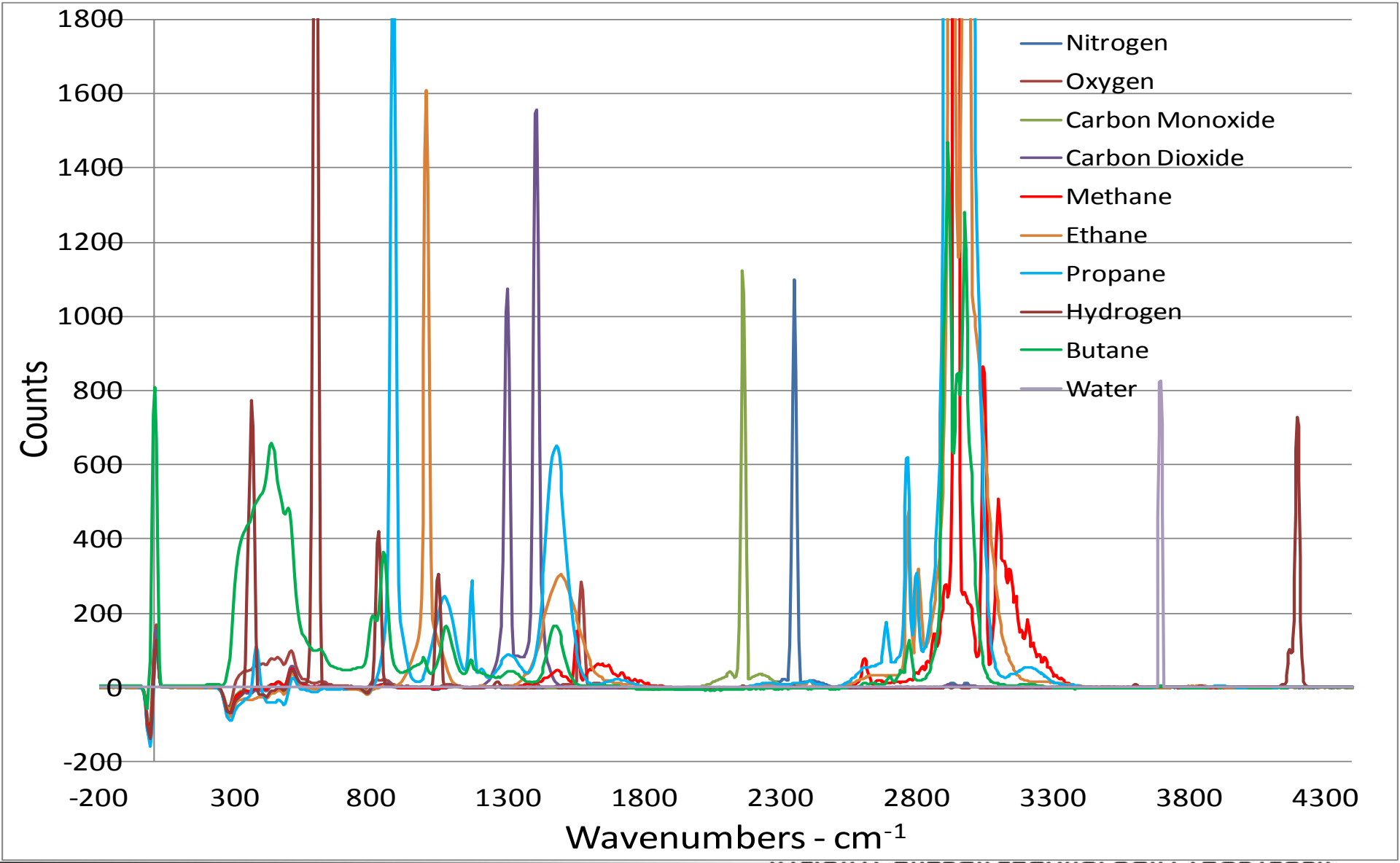

Recent Field Tests

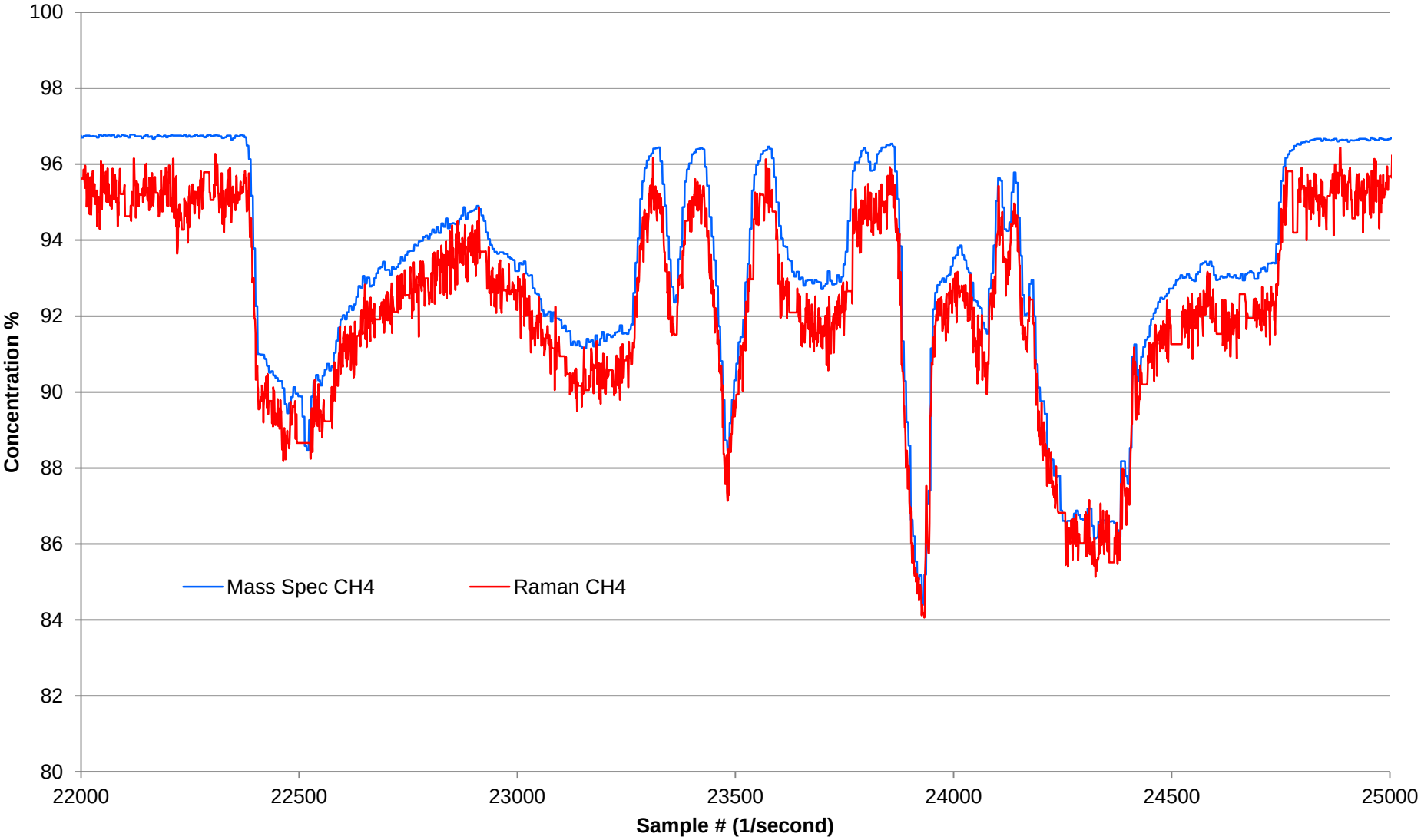

Fuel Component Raman Spectra

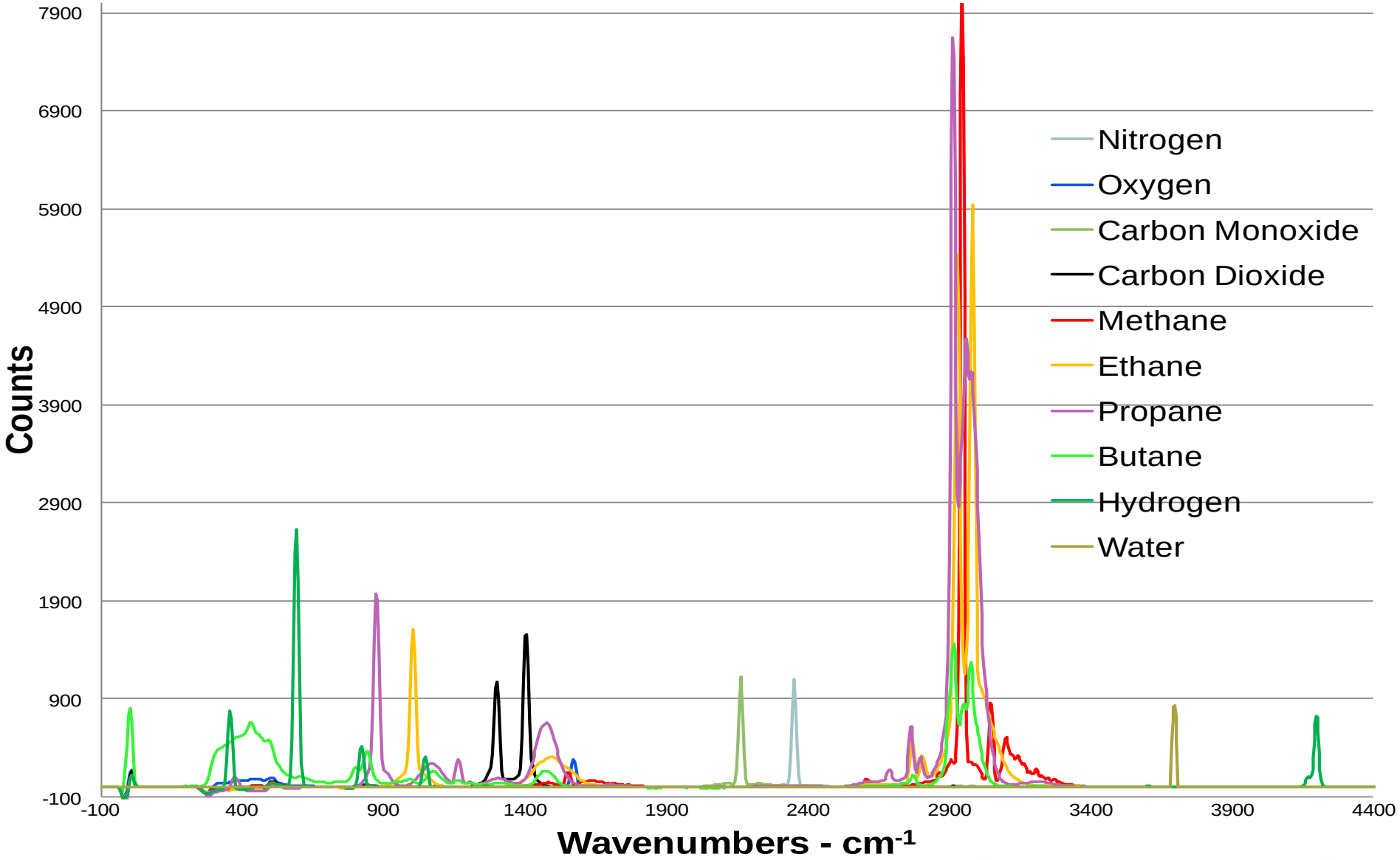

Portable unit internal components

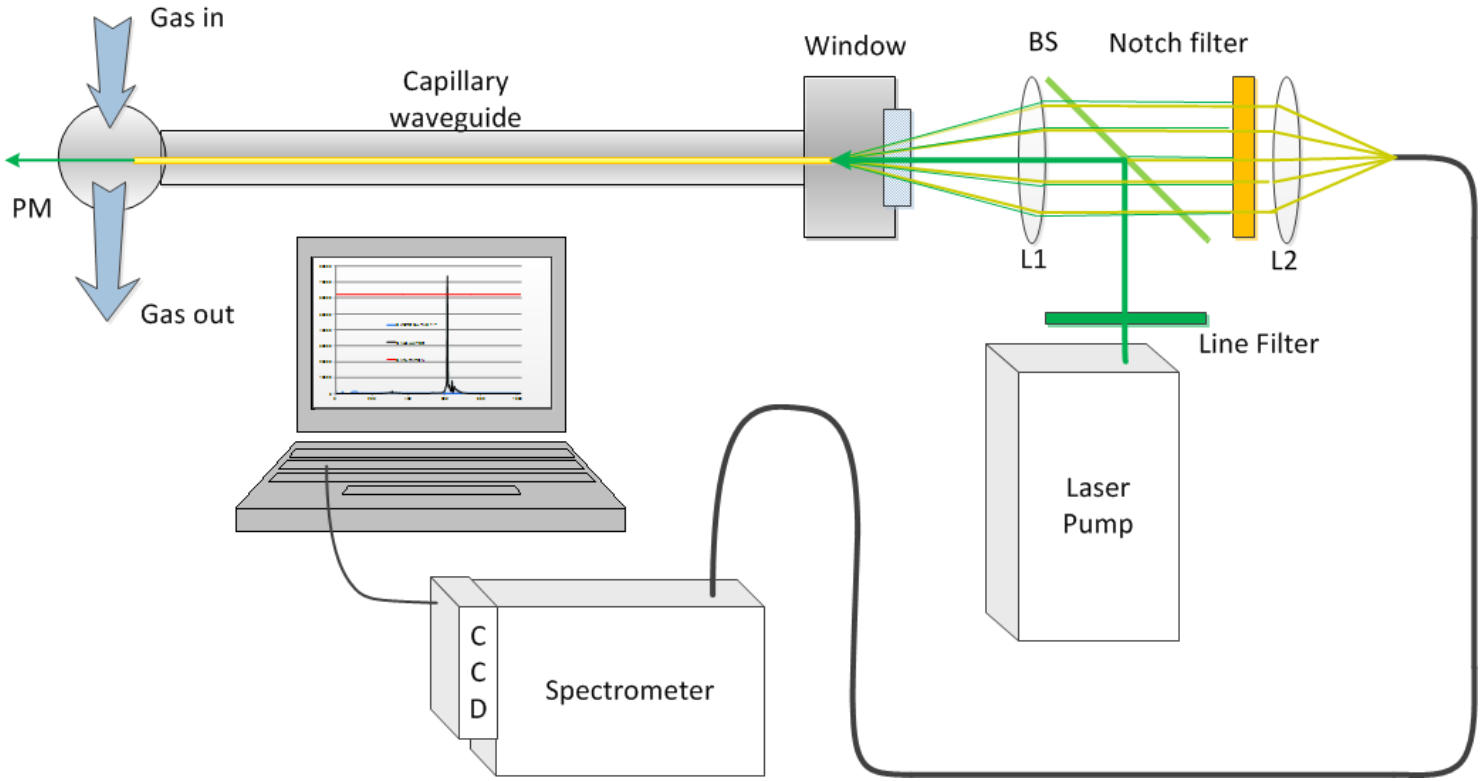

- **SPEED: One-second response time – faster than GC (minutes), and electrochemical (tens of seconds)**
- **ACCURACY: Sub-percent for all species with little cross sensitivity**
- **SIMPLICITY/STABILITY: Obtains all species at once with no tunable lasers (compare to TDLAS)**

Sensor Response Time

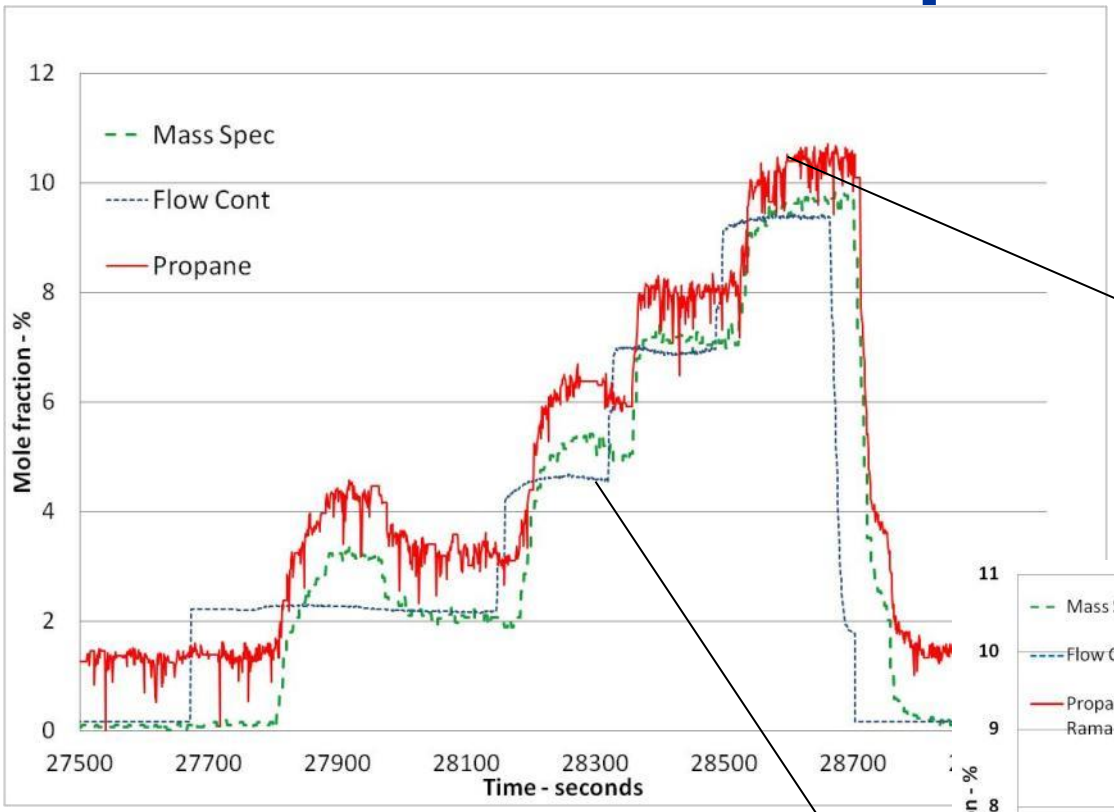

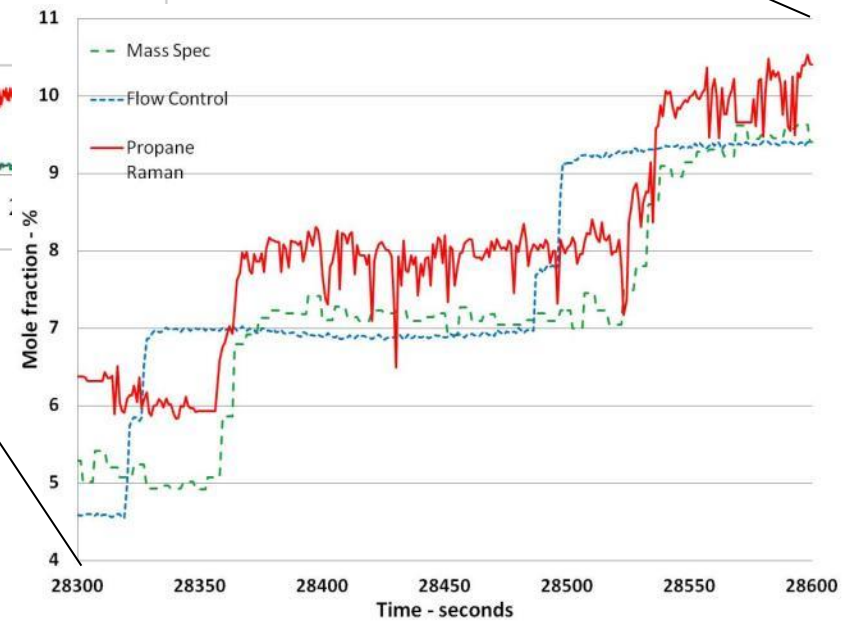

Software Improvement – Laser fitting

Circular slit function (fiber bundle)

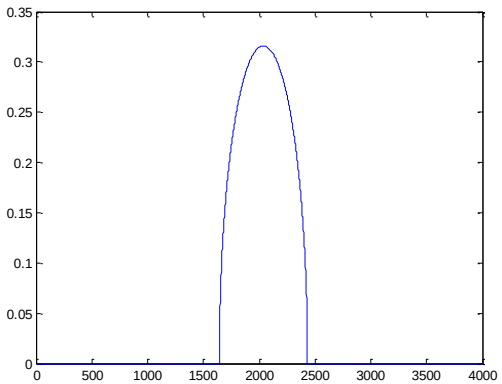

Gaussian convolution (laser line shape)

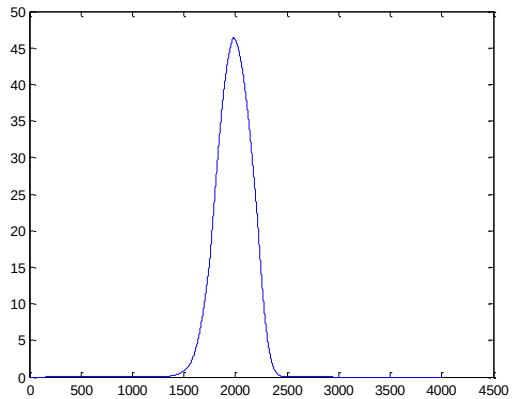

Error function for coma correction

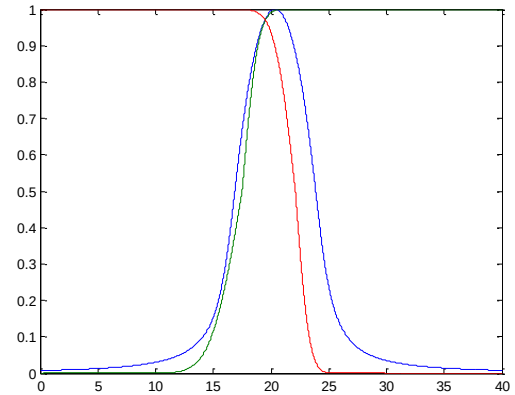

Final fit to laser line used to shift spectra

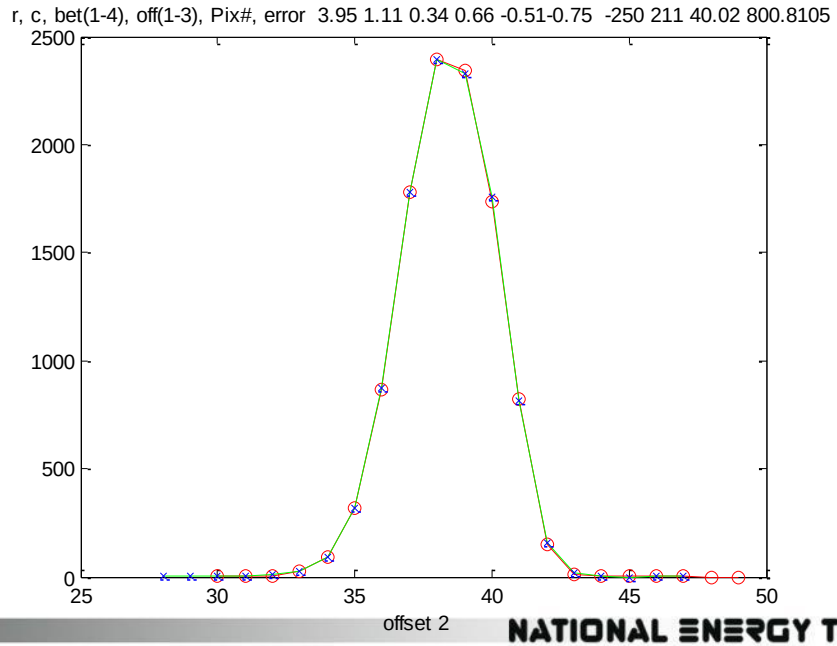

Pipeline contaminant solutions

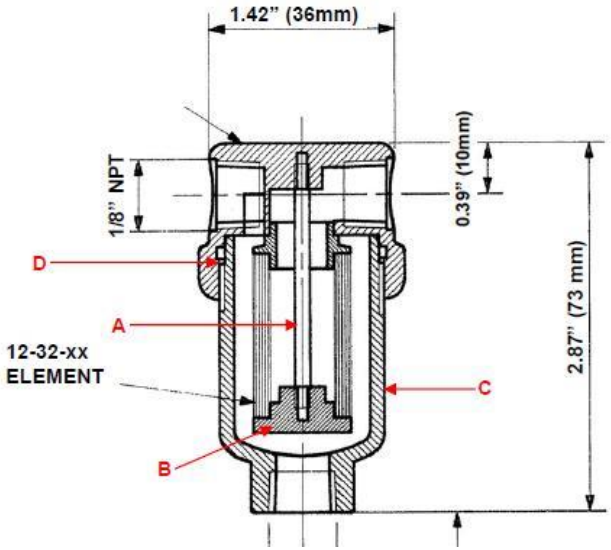

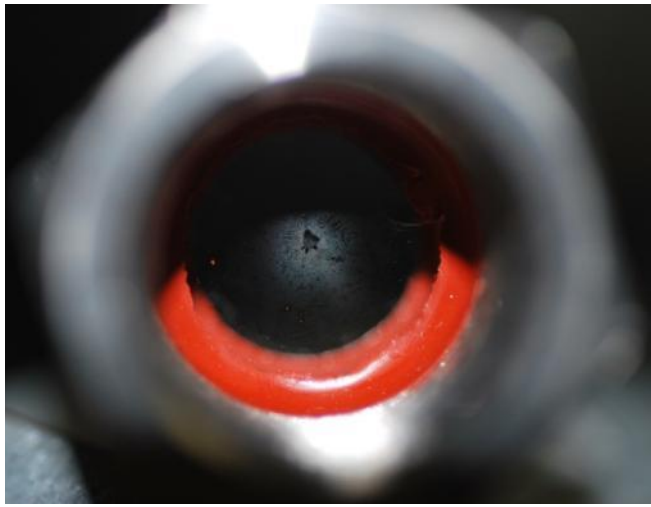

- **Heavy hydrocarbon condensation**
  - Heat to re-vaporize (>150C) and filter
- **Compressor oil / liquid droplets**
  - Filter and coalesce
  - New 4-zone heating (vs. 1-zone)
  - Divert flow until cell is hot

First Round Findings and Proposed Solutions

- **Reduce optical background variation**
  - New, low-noise NETL capillaries
  - Improved gas-cell design for stability
- **Protect from pipeline contaminants**
  - Additional filtration and heating (more zones)
  - Diverter valve on input line
- **Reduce software complexities**
  - Automatic features, simplify operation
  - Adjustment for laser frequency drift
  - Minimize species in calculation
- **Improve calibrations (temperature, pressure, etc.)**
  - Ambient or high pressure calibration

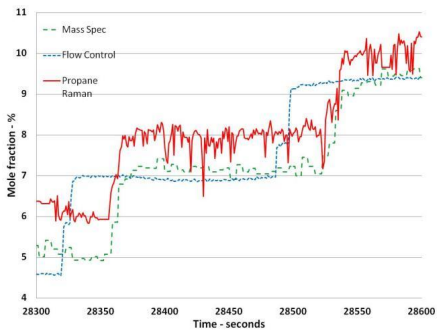

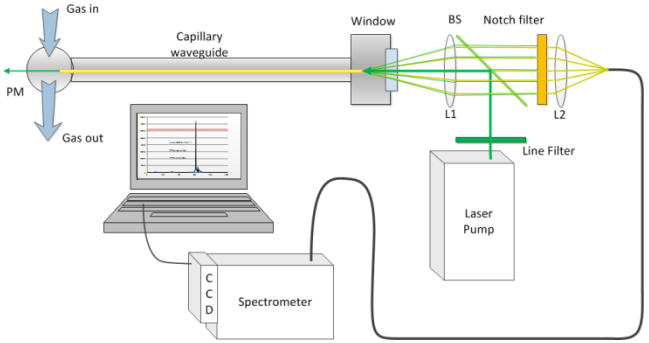

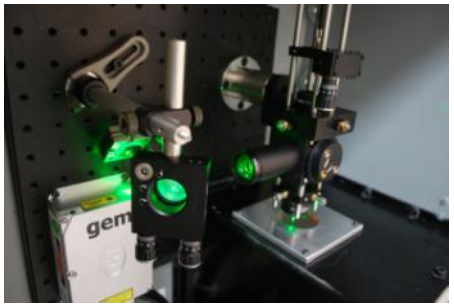

New Improved Capillaries

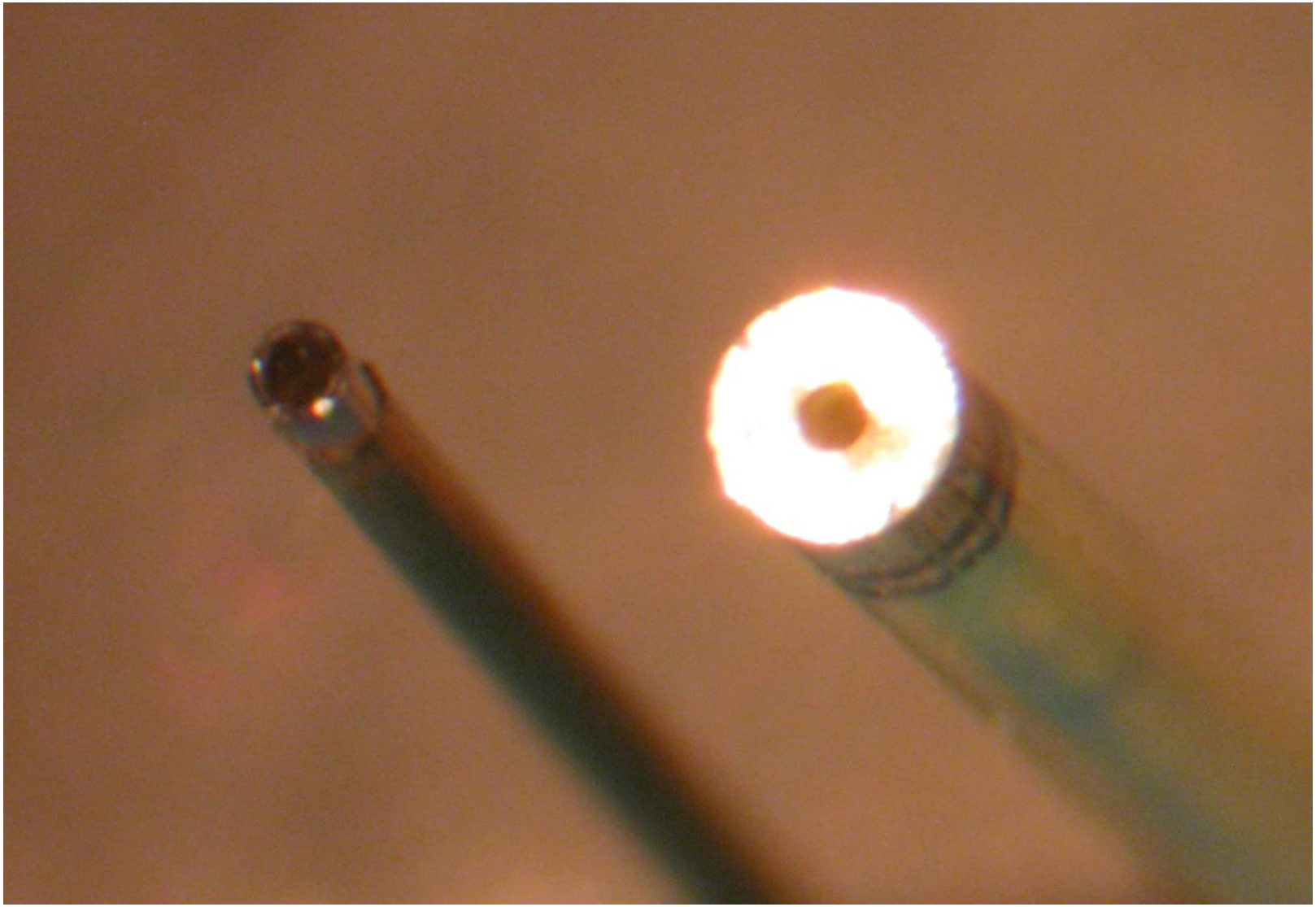

Recent Publications

- Mullen, J., Buric, M.P., Woodruff, S.D, Chorpening, B., "Azimuthal polarization for Raman enhancement in capillary waveguides", SPIE Photonics West, Feb. 2013
- Woodruff, S.D., "Field tests of the Raman gas composition sensor", Future of Instrumentation International Workshop, October 2012, Gatlinburg, Tennessee
- Biedrzycki, S., Buric, M.P., Falk, J., Woodruff, S.D., "Spectrometer-less Raman detection using rotating tunable band-pass filters", CLEO, May 2012, paper JTh2A
- Wooddruff, S.D., Coal World, "NETL Technology Enables Real-Time Coalbed Methane Analysis for Combustion," July 2012
- SPIE Defense Sensing and Security 2012 - "Field testing the Raman gas composition sensor for gas turbine operation") with S. Woodruff, J. Mullen, J. Ranalli, B. Chorpening, M. Buric
- Biedrzycki, Buric, Falk, and Woodruff, "Angular output of hollow, metal-lined, waveguide Raman sensors", *Applied Optics* 2011
- Buric, Chen, Falk, and Woodruff, "Multimode metal-lined capillaries for Raman collection and sensing", *JOSA B*, 2010
- Buric, Falk, and Woodruff, "Conversion of a TEM_{10} beam into two nearly Gaussian Beams", *Applied Optics*, 2010
- Buric, Chen, Falk, and Woodruff, "Improved Sensitivity Gas Detection by Spontaneous Raman Scattering", *Applied Optics*, 2009
- Buric, Chen, Falk, and Woodruff, "Enhanced spontaneous Raman scattering and gas composition analysis using a photonic bandgap fiber", *Applied Optics* 2008
- Buric, Chen, Falk, and Woodruff, "Photonic-Bandgap-Fiber Sensors for Gas Detection" Trends in Photonics 2008, Research Signpost
- Woodruff , Buric, and Falk, "Rapid Raman, On-line, Gas Analyzer for Feed-forward/Feedback Control", 5th Annual Conference on Composites, Materials, and Structures, 2011
- Biedrzycki, Buric, Falk, and Woodruff, (Optical efficiency in metal-lined capillary waveguide Raman sensors", SPIE Symposium on Defense, Security + Sensing 2011
- Buric, Chen, Falk, and Woodruff, "Metal-lined capillaries for gas-Raman enhancement", *Conference on Lasers and Electro-Optics*, 2010
- Buric, Chen, Falk, Velez, and Woodruff, "Raman Sensing of Fuel Gases Using a Reflective Coating Capillary Optical Fiber" SPIE Symposium on Defense, Security + Sensing April 15, 2009
- Buric, Chen, Falk, and Woodruff, "Improved Sensitivity Spontaneous Raman Scattering Multi-Gas Sensor", *Conference on Lasers and Electro-optics* 2009
- Buric, Falk, Chen, and Woodruff, "Enhanced Spontaneous Raman Scattering using a Photonic Crystal Fiber", *Conference on Lasers and Electro-optics* 2008
- Woodruff, Buric, Chen, and Falk, "Biomedical Optics Photonic-Crystal-Fiber Raman Spectroscopy for Real-Time, Gas-Composition Analysis", Laser applications to Chemical, Security, and Environmental Applications, 2008

Laser-launch conditions

$$\alpha_{1m} \cong \frac{u_{1m}^2}{K^2R^3} * Re\left(\frac{\frac{1}{2}(v^2+1)}{\sqrt{v^2-1}}\right.$$

$$\theta_{1m} \cong \frac{u_{1m}}{K * R} \qquad K = \frac{2\pi}{\lambda}$$

Mode # (m)	u_{1m}	θ_{1m}(degrees)	α_{1m}(per meter)	Throughput (%)
1	3.83	0.116	0.00188	99.62
2	7.02	0.213	0.00631	98.75
3	10.17	0.308	0.013	97.43
4	13.32	0.404	0.0227	95.56
5	16.47	0.499	0.0347	93.30

$v \cong 0.13+3.19i$ @ 532nm

$\Theta_{max} = 0.52°$

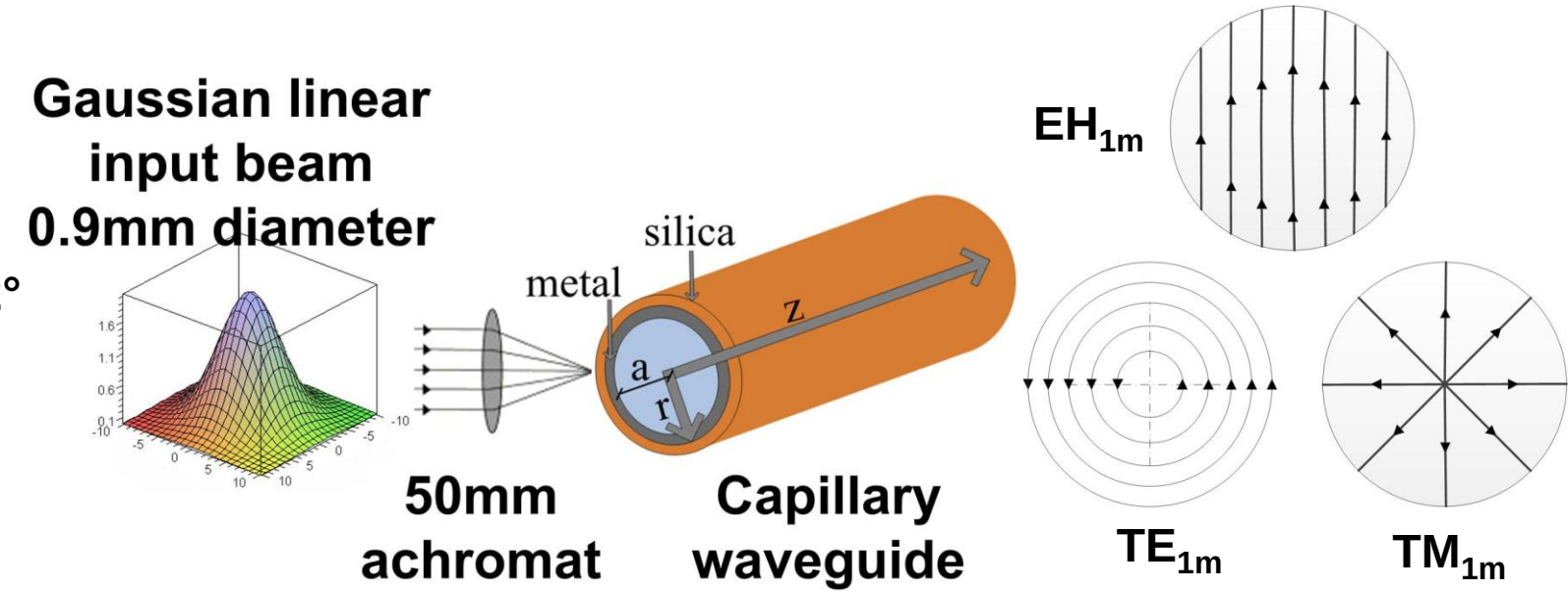

Plumbing for quick sampling

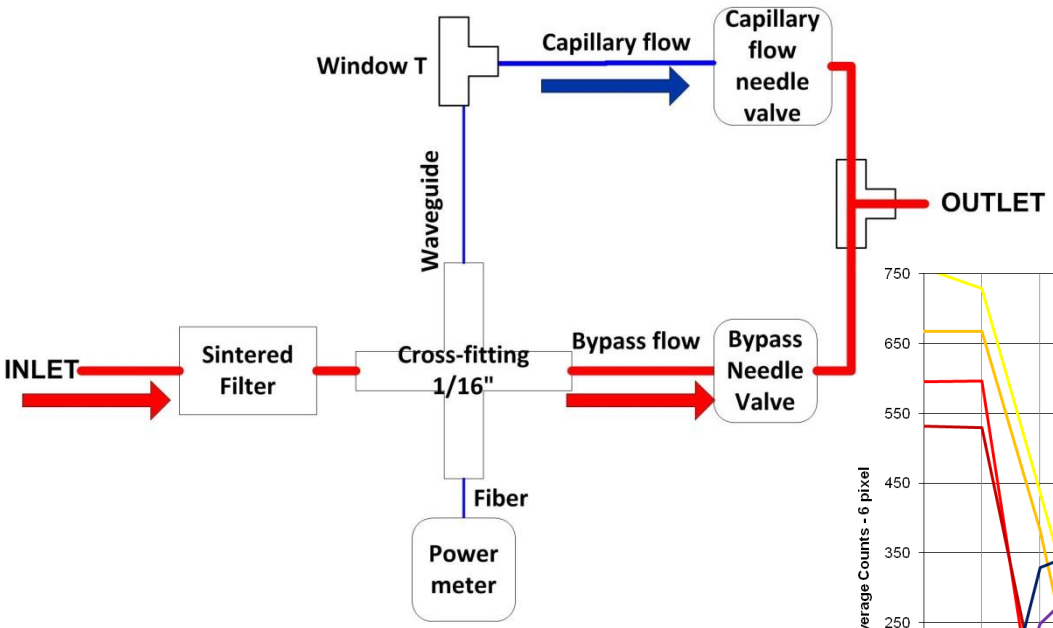

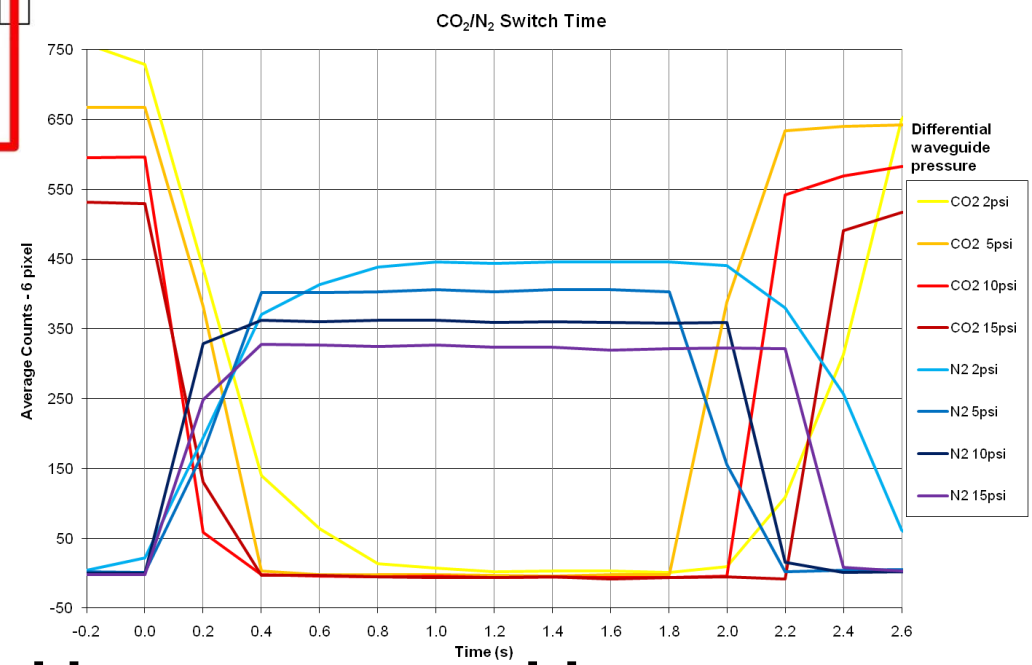

- **Bypass flow determined by upstream tubing and sample rate**
- **Capillary flow set for max sample-rate**

Chemometrics

- Spontaneous Raman is linear with concentration
- Error (~<1%) increases with # of species:

$$[G] = [C]^{-1}[M]$$

- [C], the calibration matrix, contains spectra of pure gasses
- Error mostly a result of background subtraction (commercial capillaries)
- Initial calibration only unless more gasses are added

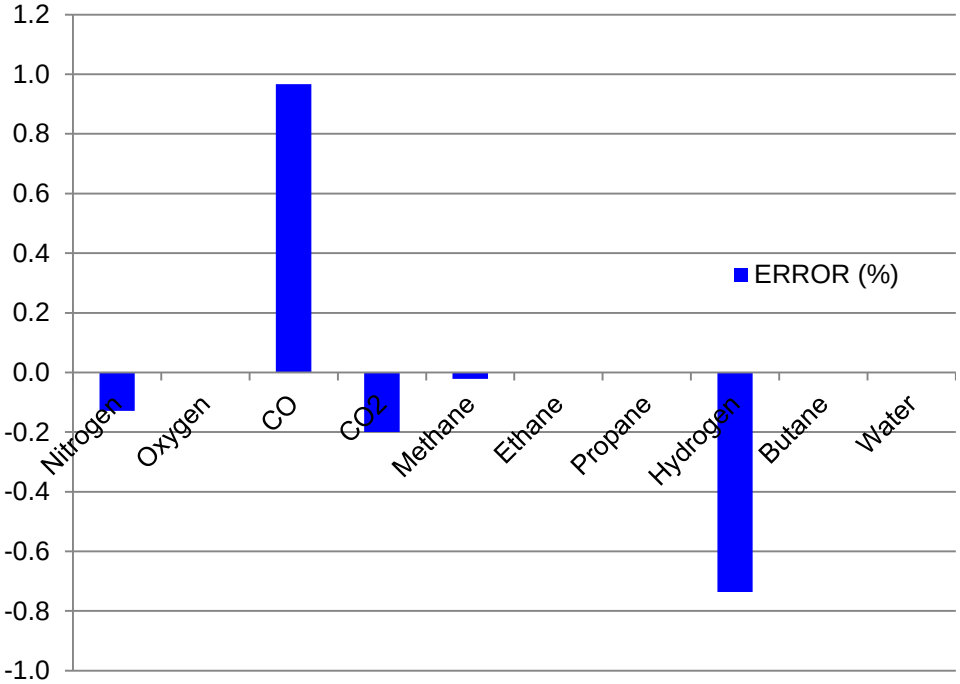

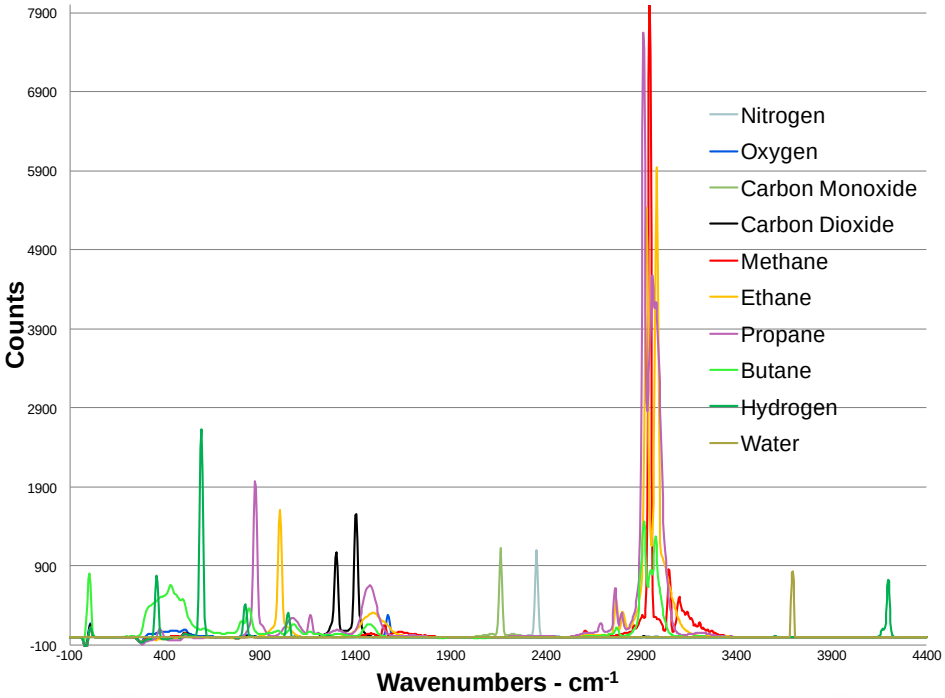

Capillary waveguide improvements

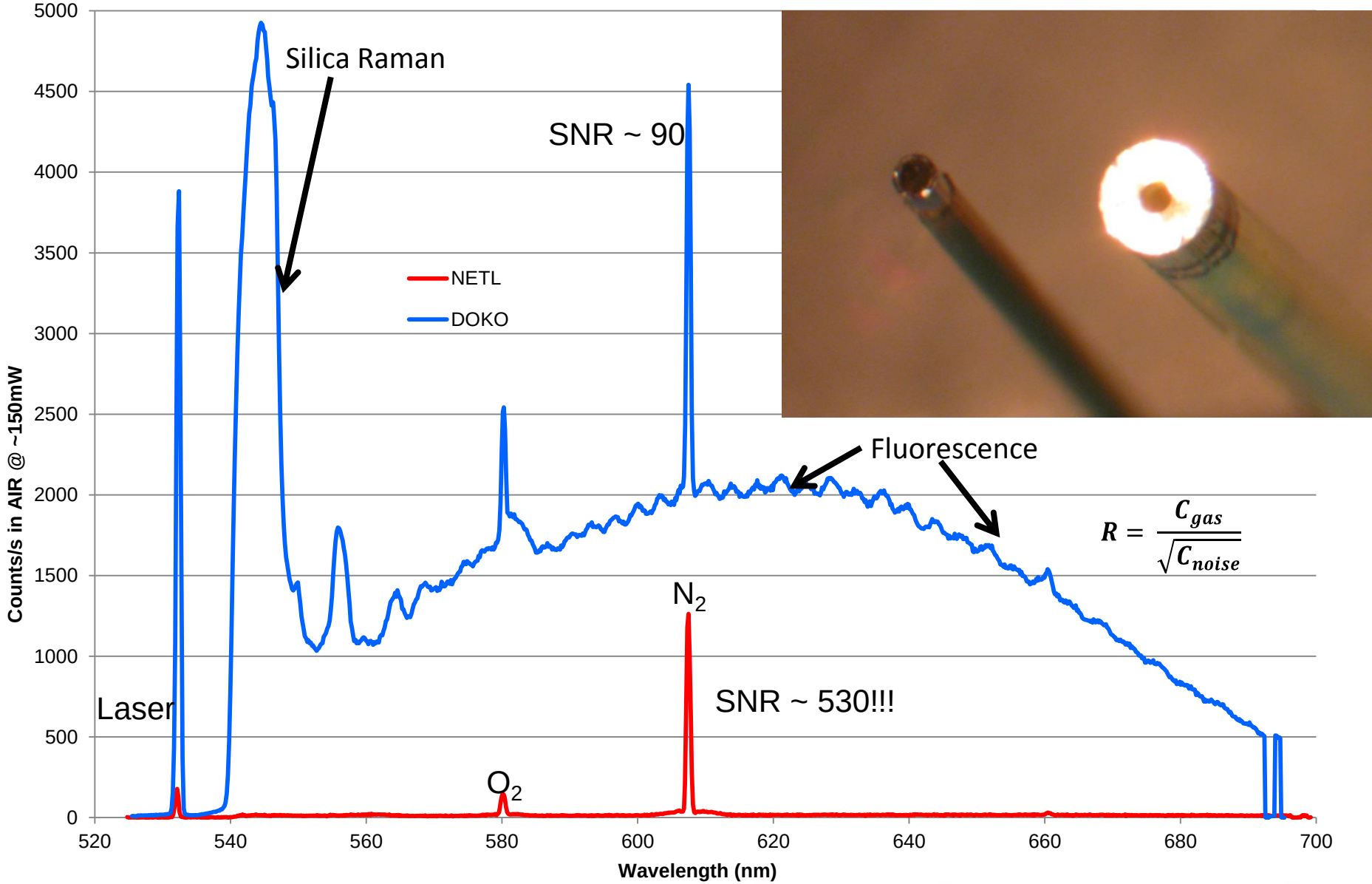

New Improved Capillaries

- Ag/polymer lined fused-silica
- Wet-chemical Tollens reaction
- NETL-designed deposition system
- Gold waveguides also produced (for 785nm)
- Pre-cleaving for end-facet coating
- Custom testing setup

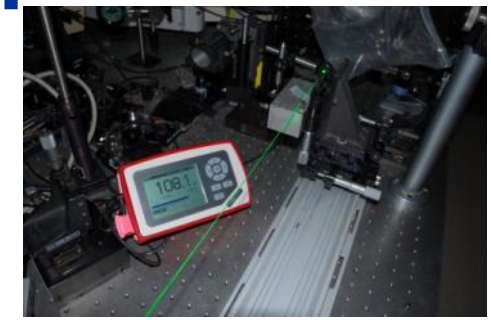

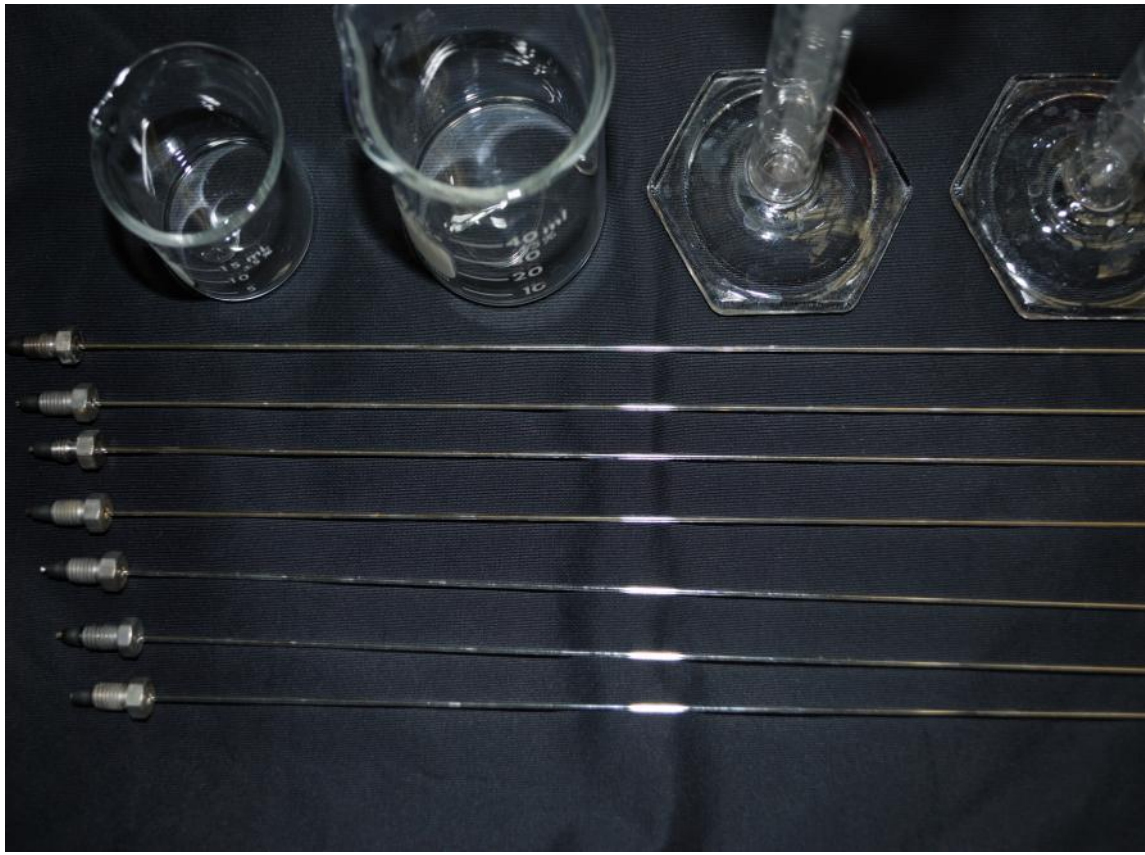

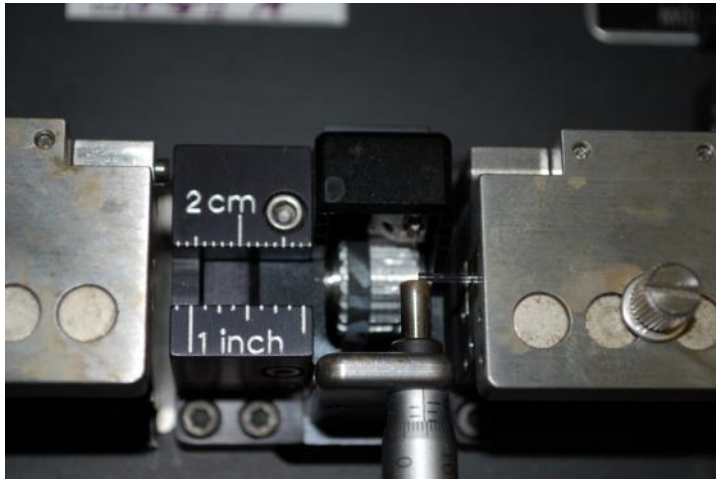

Current Detection Limits Improved ~5.9X

(1s Integration, 100 mW, 1 m Capillary, OO Spectrometer, computed for binary mixtures)