Matter in Extreme Conditions Instrument (MECi) at LCLS

J. Hastings

MECi Workshop

April 13, 2009

- *MECi* overview
- *MECi* x-ray system
- *MECi* target chamber
- *MECi* laser system
- *MECi* baseline diagnostics

LCLS Experimental Halls

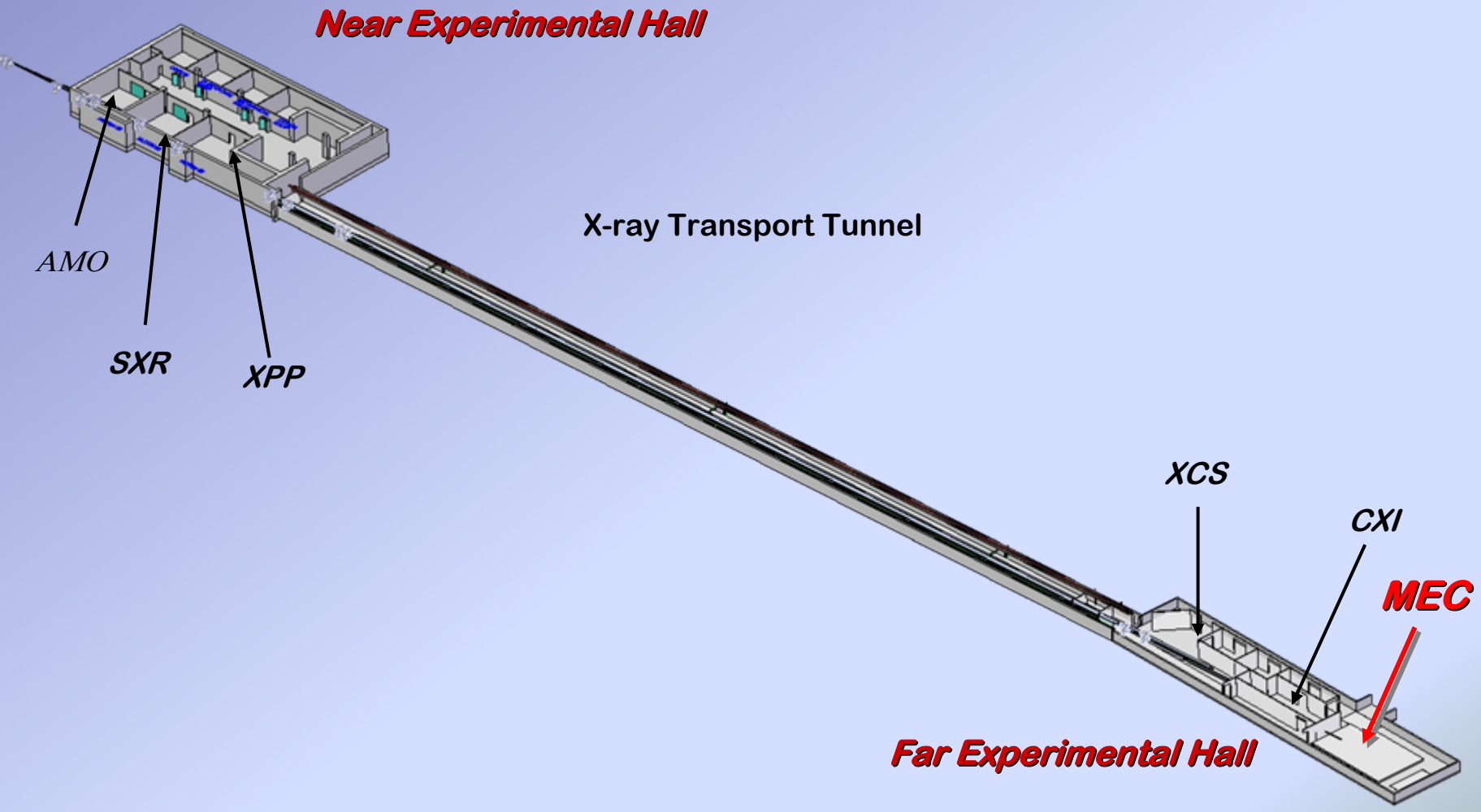

MECi proposed for LCLS will cover a wide range of experiments

- **Creating Warm Dense Matter**
  - Generate ~10 eV solid density matter
  - Measure the equation of state

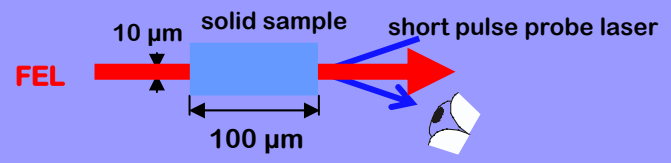

- **Probing dense matter with Thomson Scattering**
  - Perform scattering from solid density plasmas
  - Measure n_e, T_e, <Z>, $f(v)$

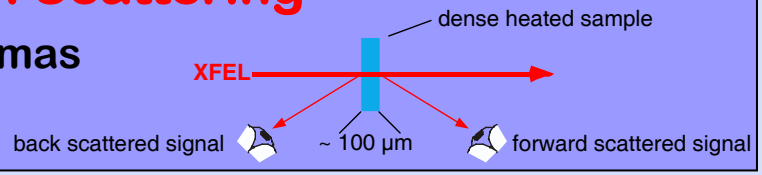

- **Plasma spectroscopy of Hot Dense Matter**
  - Use high energy laser to create uniform HED plasmas
  - Measure collision rates, redistribution rates, ionization kinetics

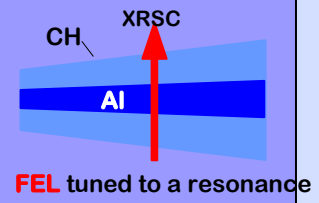

- **Probing High Pressure phenomena**
  - Use high energy laser to create steady high pressures
  - Produce shocks *and* shockless high pressure systems
  - Study high pressure matter on time scales < 1 ps
  - Diagnostics: Diffraction, SAXS, Diffuse scattering, Thomson scattering

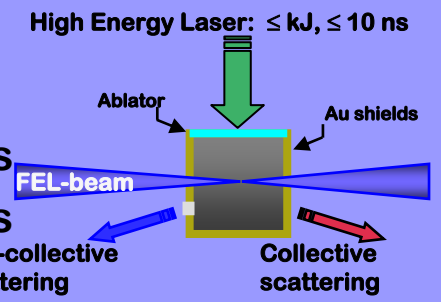

Specifications for the experiment reduced to a list

Item	Purpose	Specification
Beam-split-and-delay	Beam splitting $1^{st}/1^{st}$, $1^{st}/3^{rd}$, Delay (1st,3rd)	1st harmonic in unequal parts, $1^{st}/3^{rd}$ separation: from 10^2 fs to 1 ns adjustable delay
Focusing optics	Focusing to 100 µm - 1 µm	0.1 µrad angular stability, 0.5 µrad figure error, 5 Å surface roughness
Slits/Aperture	Beam definition	1 µm accuracy, 1 µm repeatability
Intensity monitor	Measurement of incident intensity	transmissive (<5% absolute),single pulse, relative accuracy $<10^{-3}$
Differential pumping	Separation of optics vacuum (UHV) from sample vacuum (HV)	Separation between 10^{-6} and 10^{-9} torr UHV conditions, High pumping speed
Target chamber	Sample positioning and orientation, verify sample, FEL and optical laser alignment	X-Y-Z movement (1 µm), 2 rotations (1 mdeg),Optical microscope
Detectors	Angle-, space-resolved x-ray emission	Soft x-ray (grating) and hard x-ray (crystal) spectrometers, High efficiency, Scanning not necessary
X-ray streak camera	Time-resolved detection	Time resolution ~100 fs, efficient
X-diffraction detector	X-ray diffraction and small angle scattering	X-ray detector, 1K x 1K
Intensity monitor	Measurement of transmitted intensity	Transmissive (<5% absolute), Single pulse, relative accuracy $<10^{-3}$
Spectral monitor	Measurement of mean energy, bandwidth, and harmonic content	Single pulse measurement, $E/\Delta E \sim 10^4$
Time monitor	Measurement time domain properties	Single pulse measurement
Spatial monitor	Single pulse measurement	Single pulse measurement

MECi Layout

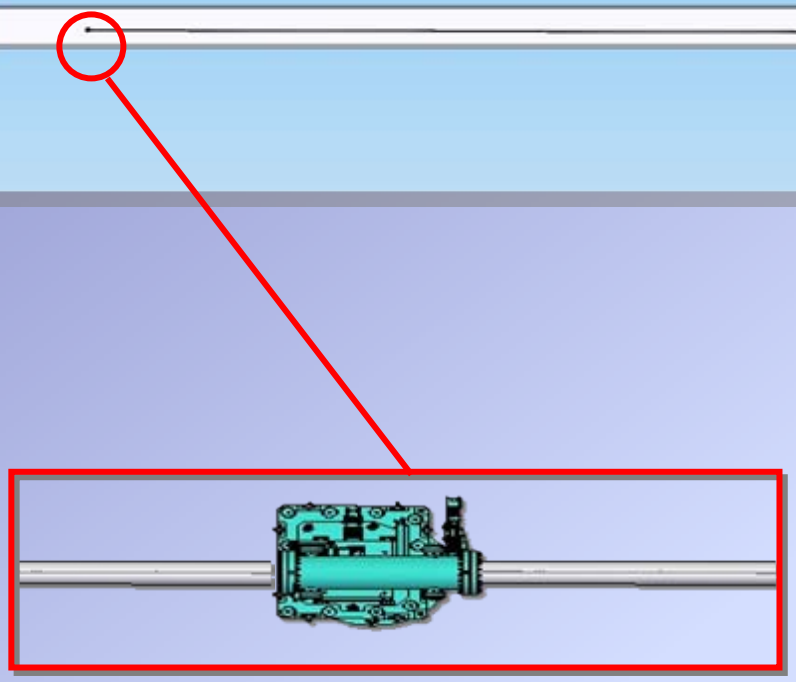

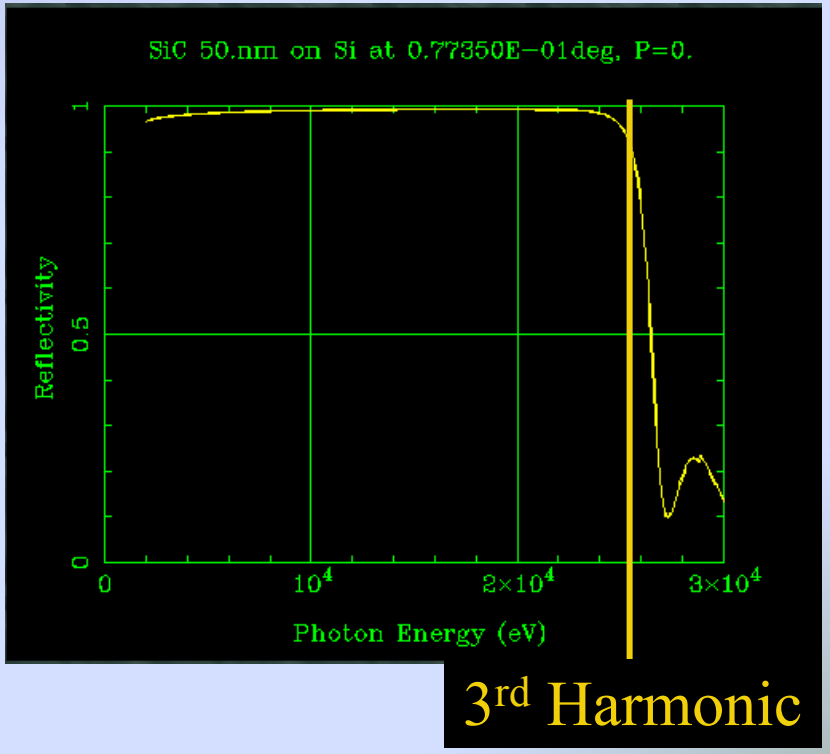

Si substrate

50 nm of SiC (90% solid density)

LCLS Far Experimental Hall Layout

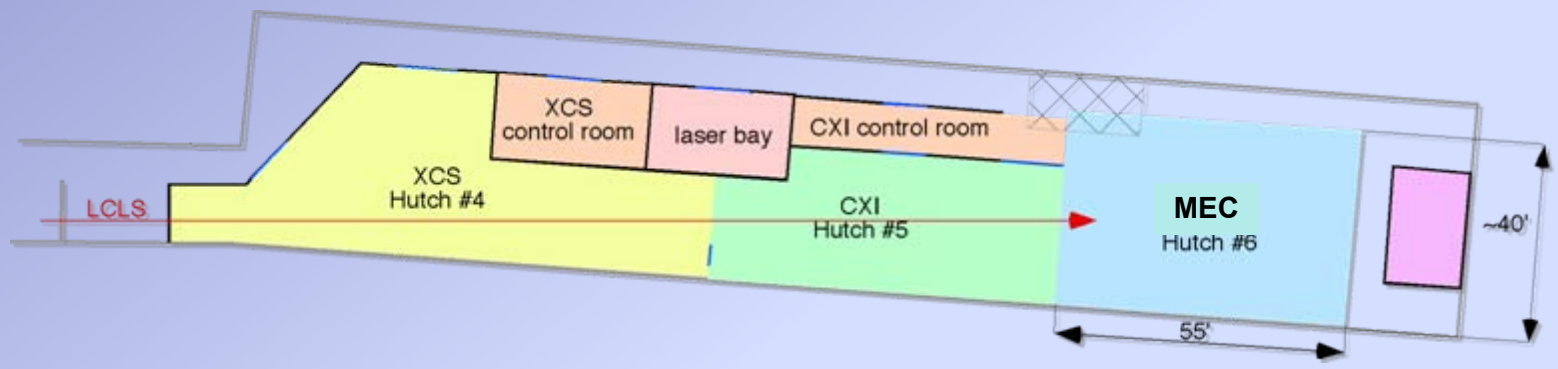

MECi Hutch Layout

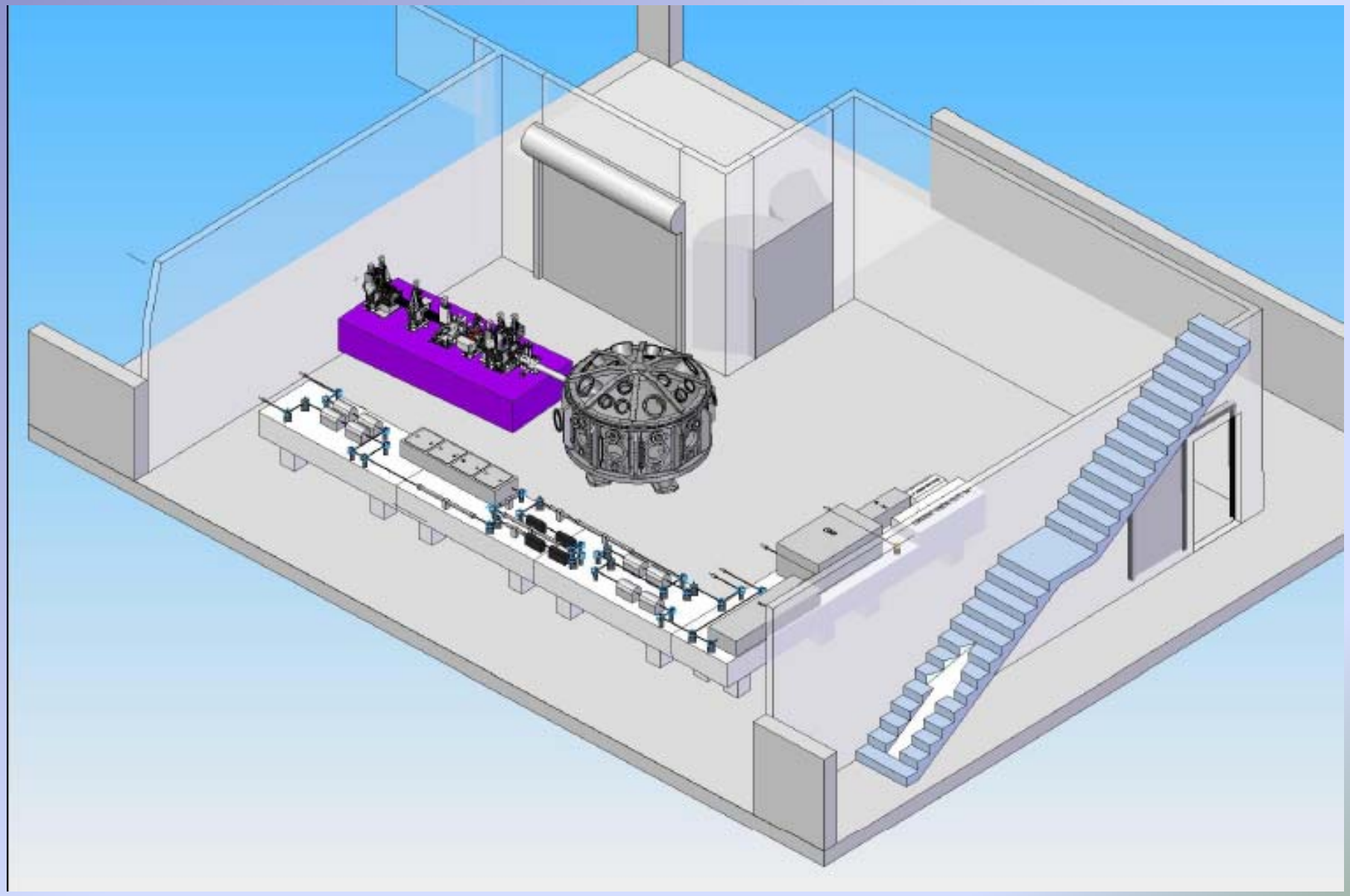

MECi hutch layout details

(plan view)

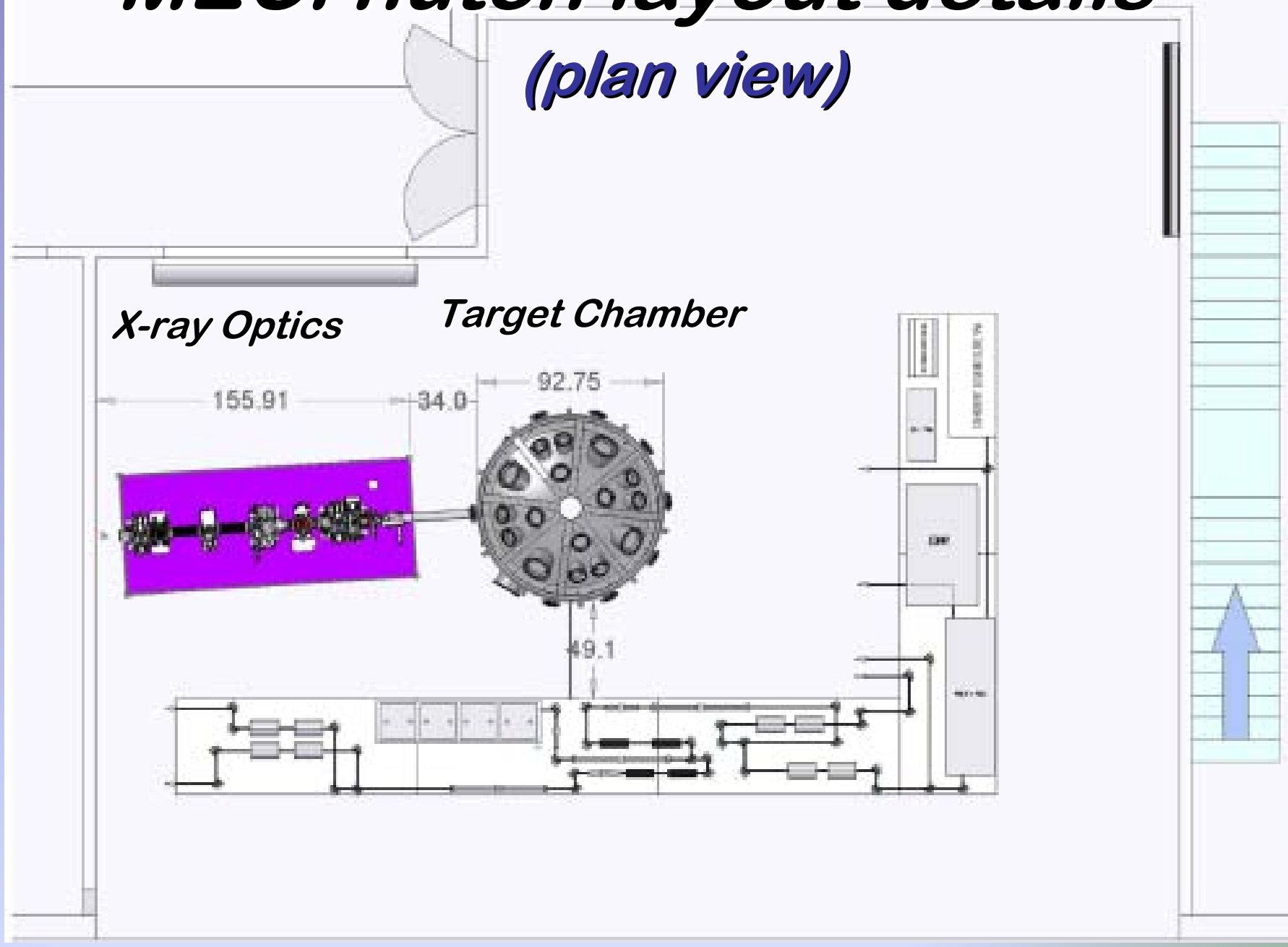

MECi hutch layout details
(elevation view)

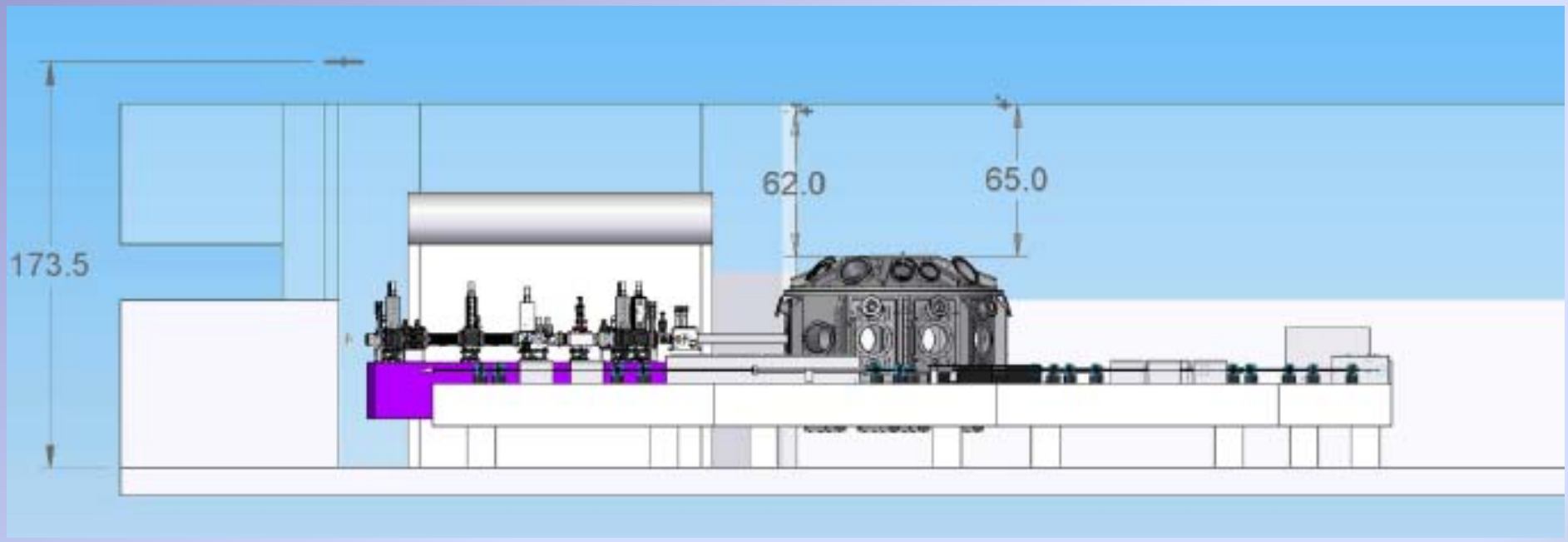

MECi X-ray Optics

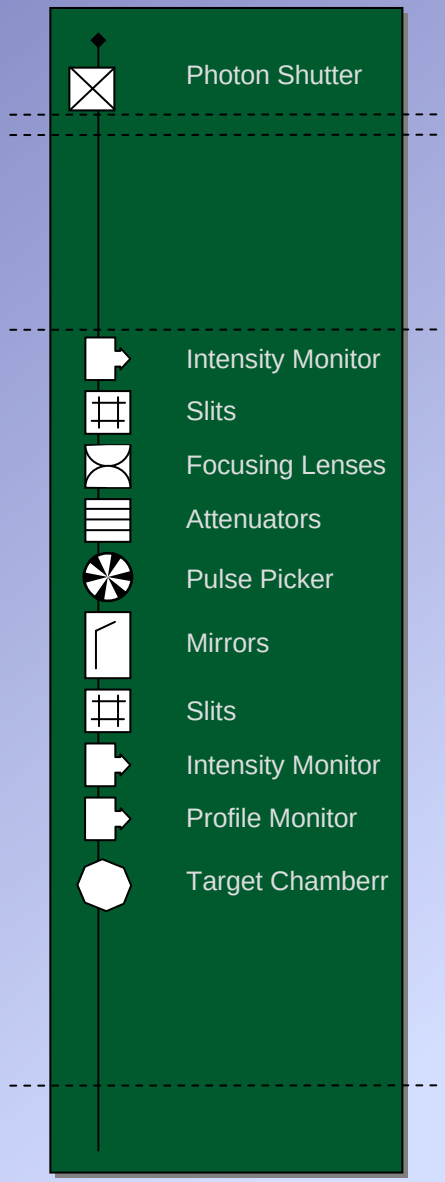

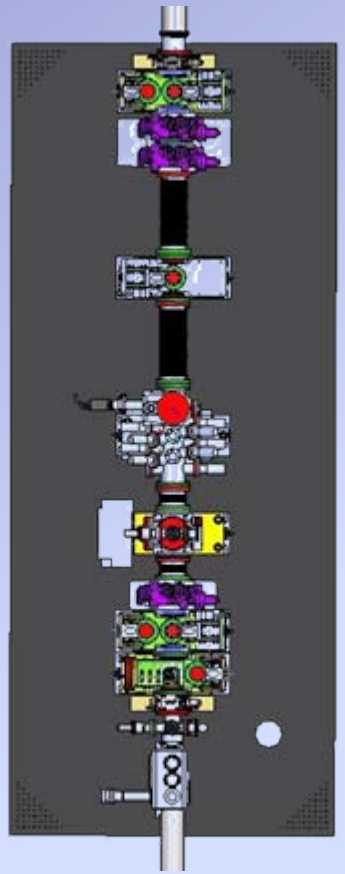

Requirement	Device
Tailor X-ray spatial profile (> 50 microns)	X-ray Slits
Tailor X-ray spatial profile (< 50 microns)	X-ray Focusing Lenses
Tailor X-ray intensity and spectrum	Attenuators
Tailor X-ray repetition rate	Pulse Picker
Tailor X-ray spectrum	Harmonic Rejection Mirrors
Characterize X-ray pulse intensity	Intensity Monitor
Characterize X-ray spatial profile	Profile Monitor

Pop-in profile monitor

Task: Characterize spatial profile

Diagnostic: Profile-intensity monitor

Goals: 4 micron spatial resolution (1 mm FOV)

50 micron spatial resolution (12 mm FOV)

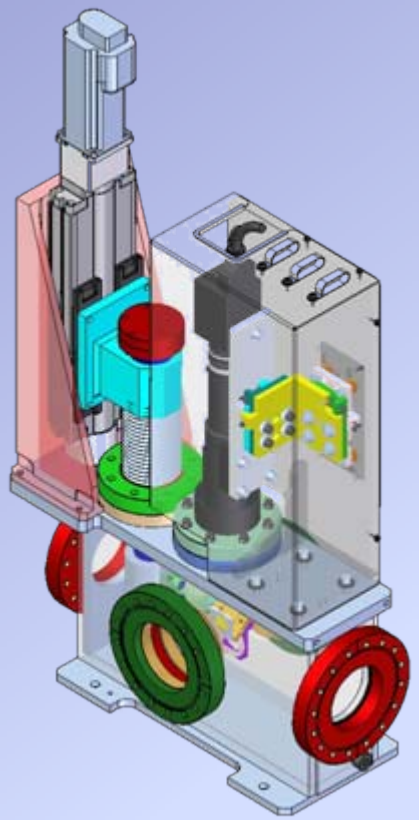

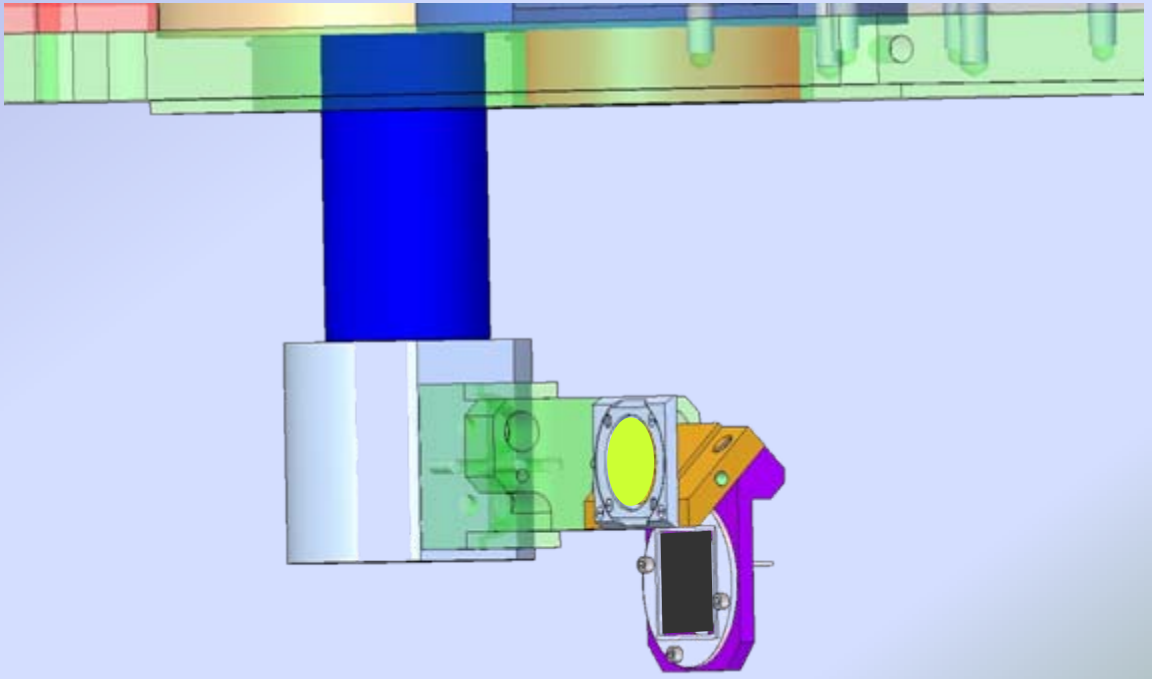

Leave in intensity-position monitor

Task: Non-invasively characterize pulse energy and beam position

Diagnostic: Intensity-position monitor

Goals: Transmission > 95%

< 0.1% relative accuracy (pulse energy)

< 10 micron relative accuracy (position)

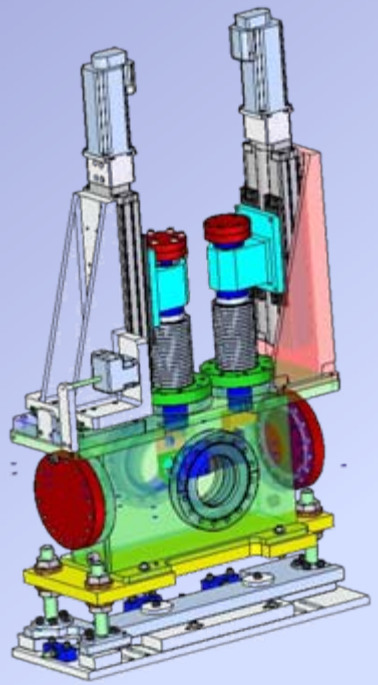

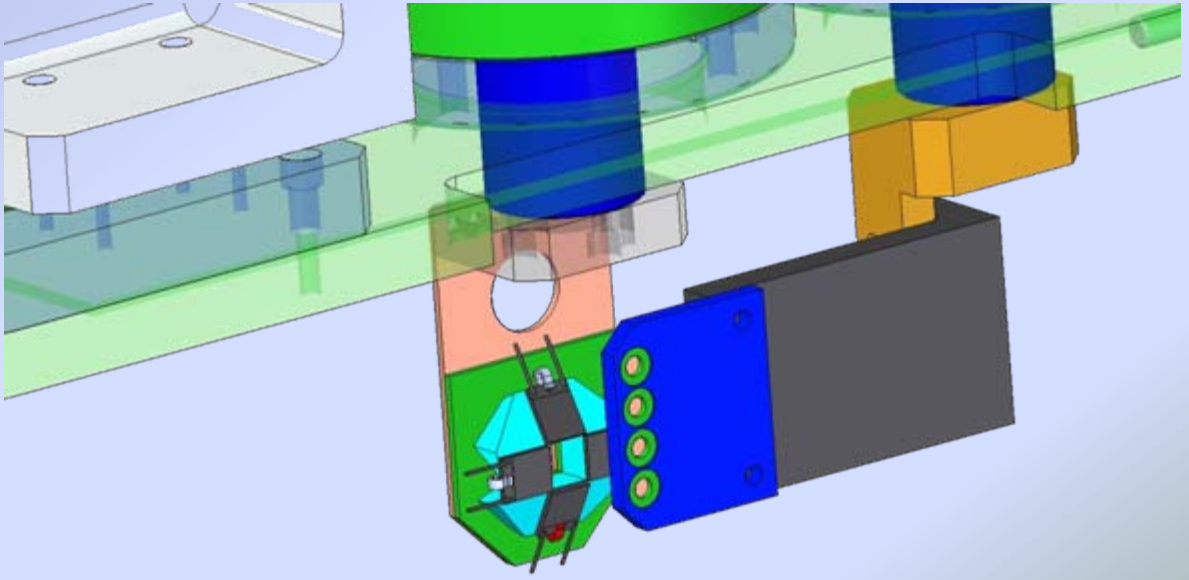

Be lens focusing system

Task: Tailor x-ray spatial profile

Diagnostic: X-ray focusing lenses

Goals: < 2 micron position repeatability (X & Y)

Accommodate 3 lens stacks

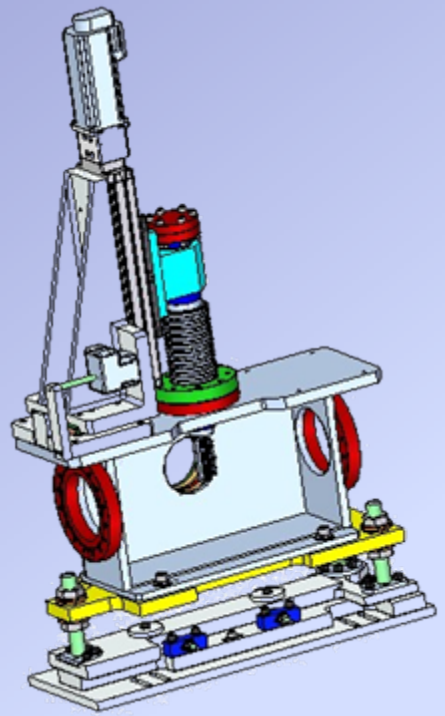

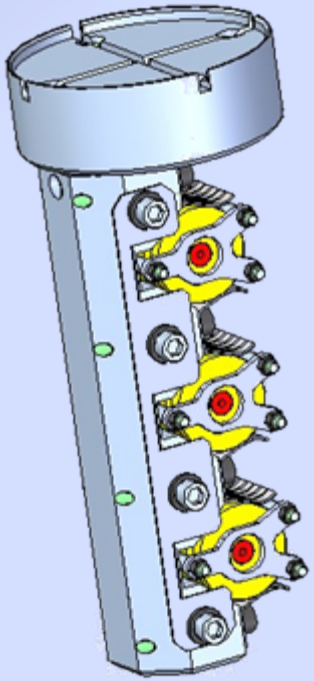

Si beam attenuators

Task: Tailor x-ray spatial profile

Diagnostic: Attenuators

Goals: > 2 steps be decade attenuation > 5 keV

> 10^{12} attenuation @ 8 keV, 10^{4} @ 25 keV

Minimize wavefront distortion

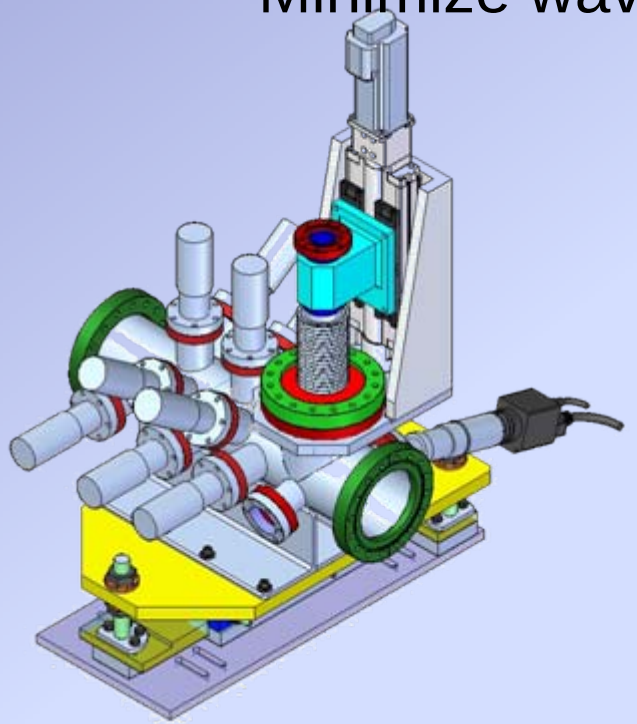

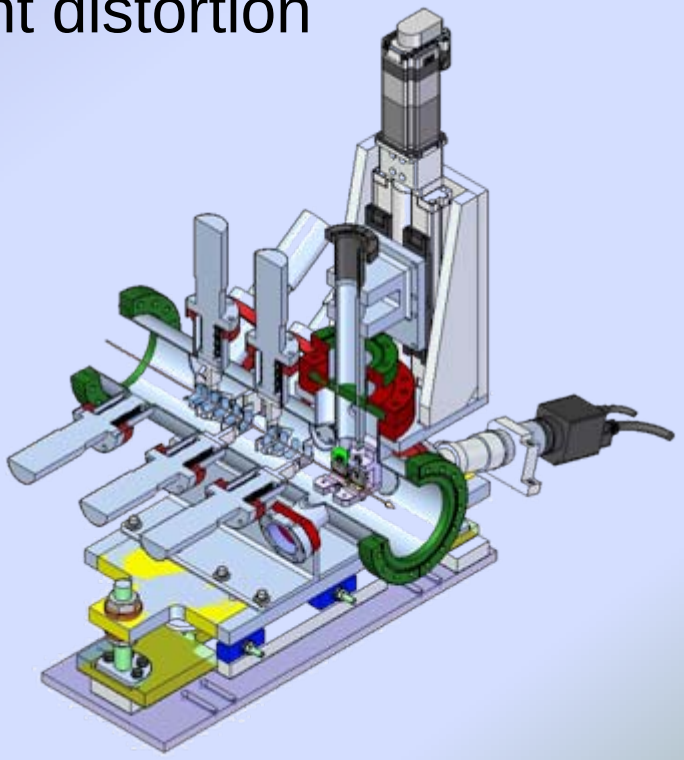

Pulse picker

Task: Tailor pulse repetition rate

Diagnostic: Pulse picker

Goals: Isolate single pulse from 120 Hz train

Operate up to 10 Hz

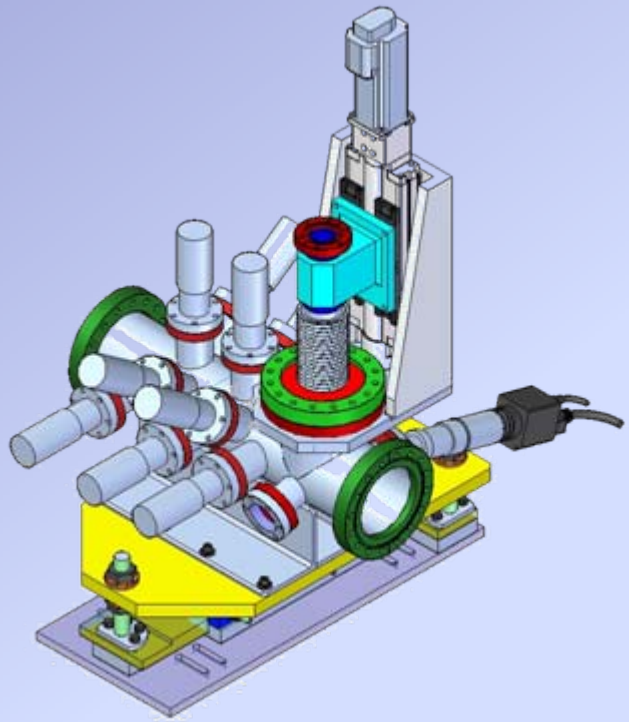

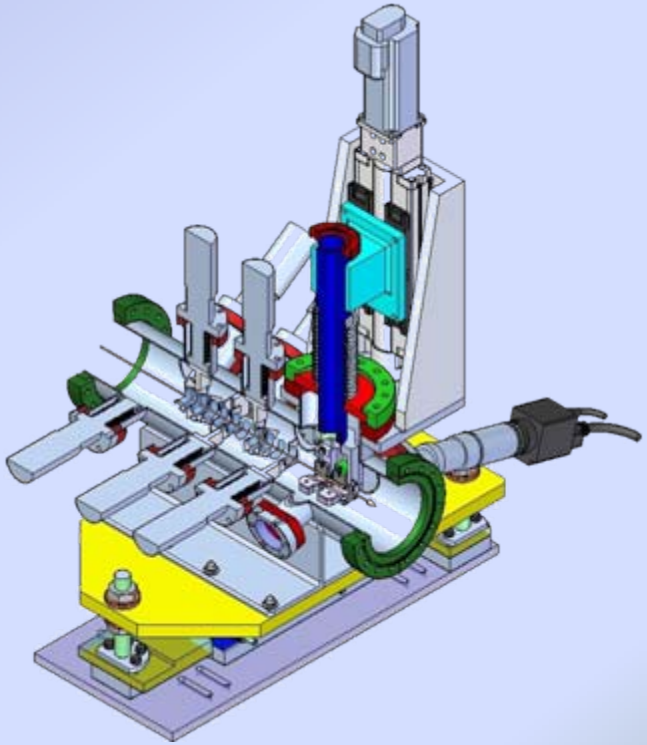

Target Chamber

MECi Target Chamber Concept

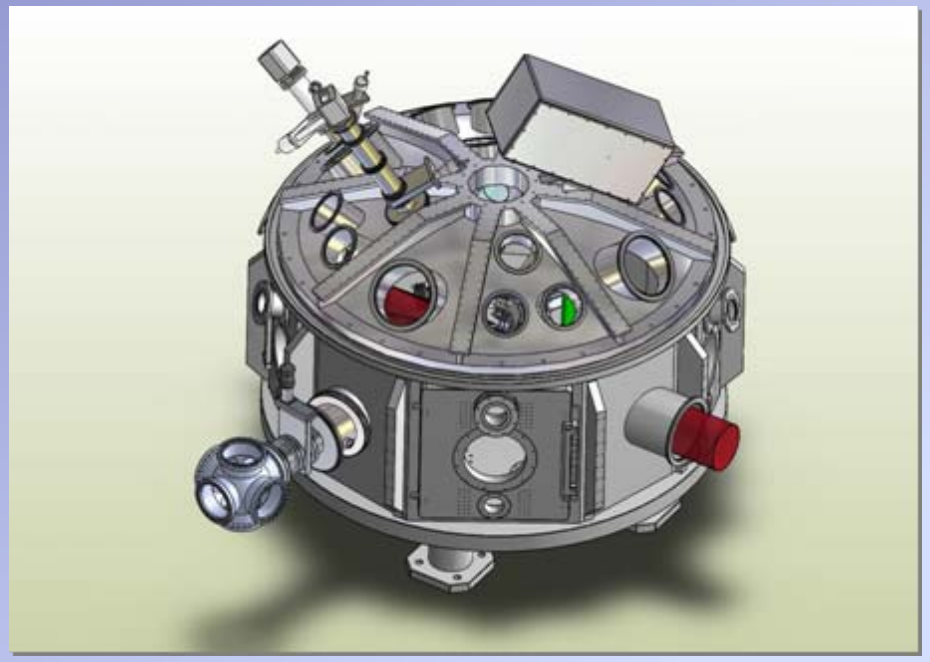

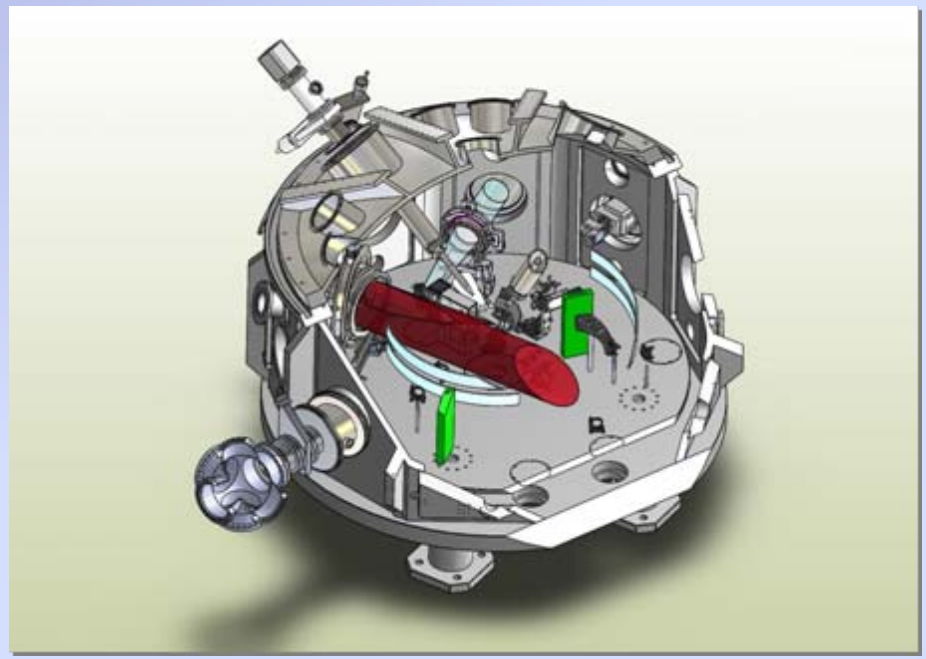

Titan Target Chamber - LLNL

Chamber with diagnostics

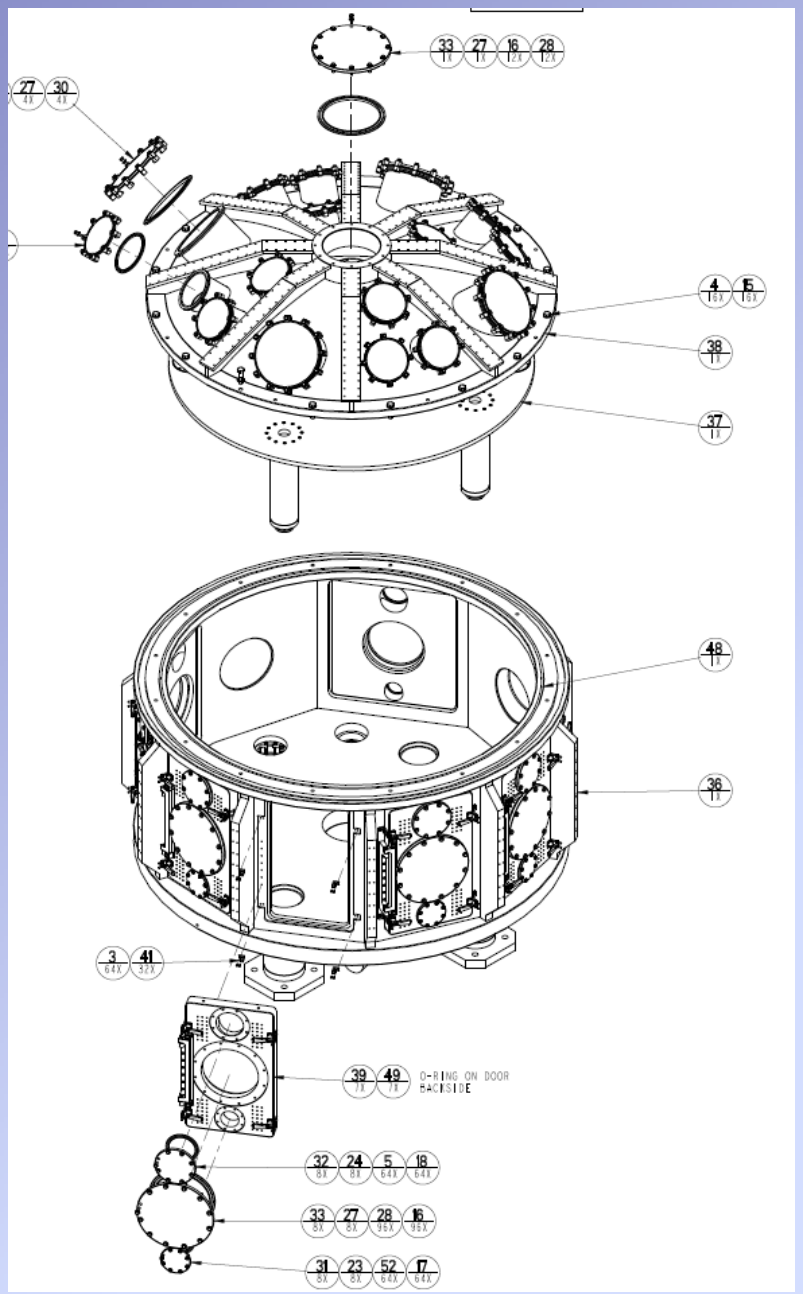

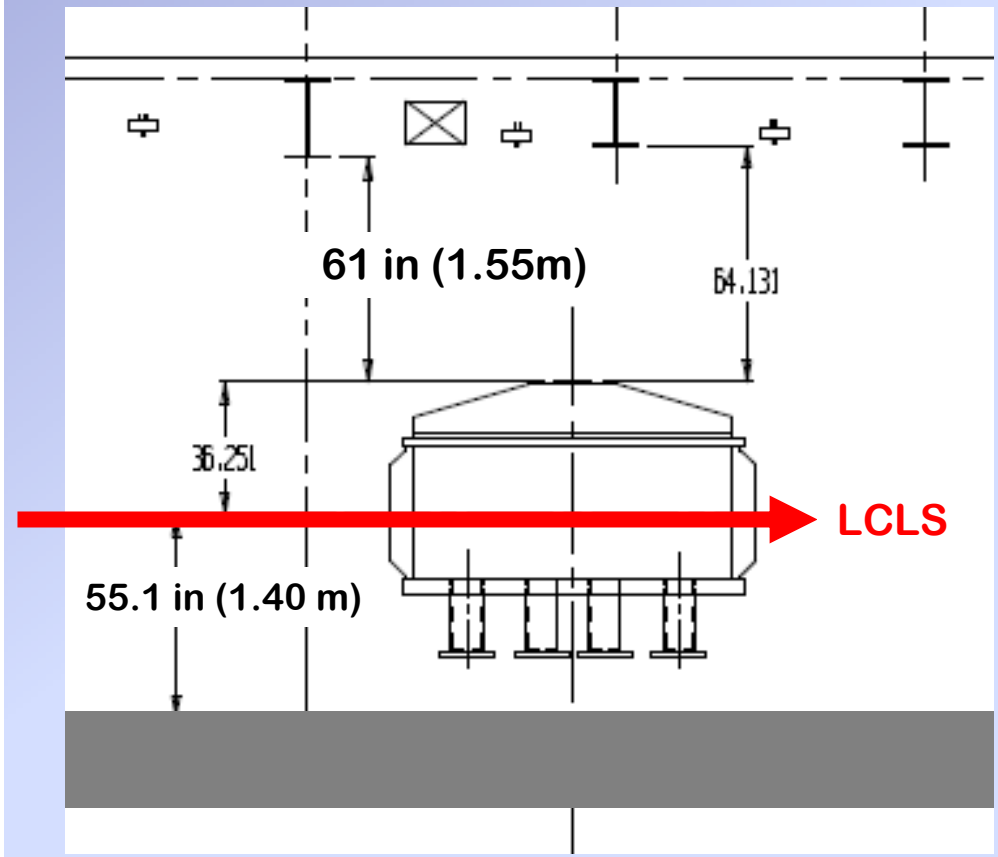

LLNL Titan Chamber

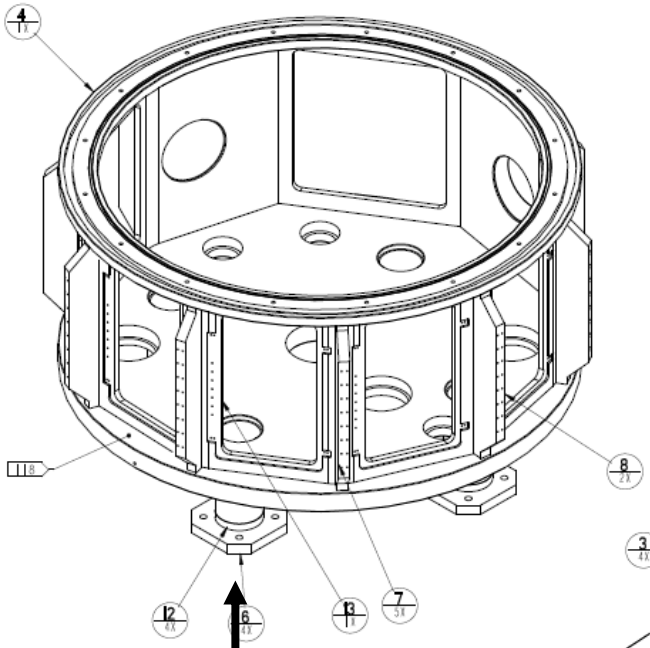

‘hollow’ legs

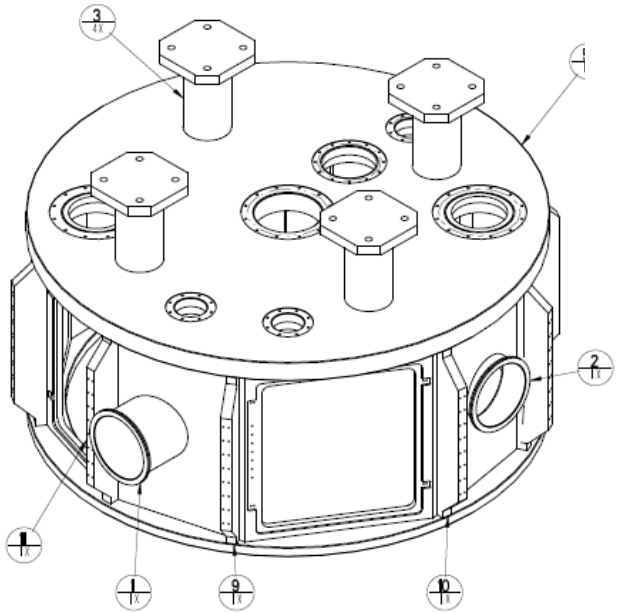

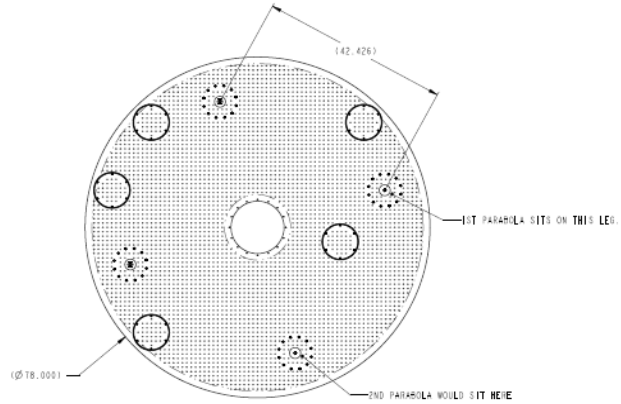

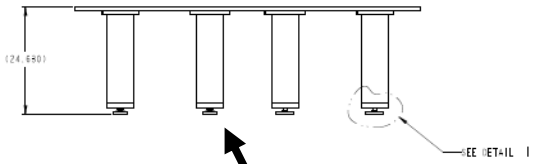

Optical bread board legs
‘rest’ on the floor

Laser systems

4x30 J, 532nm ns laser

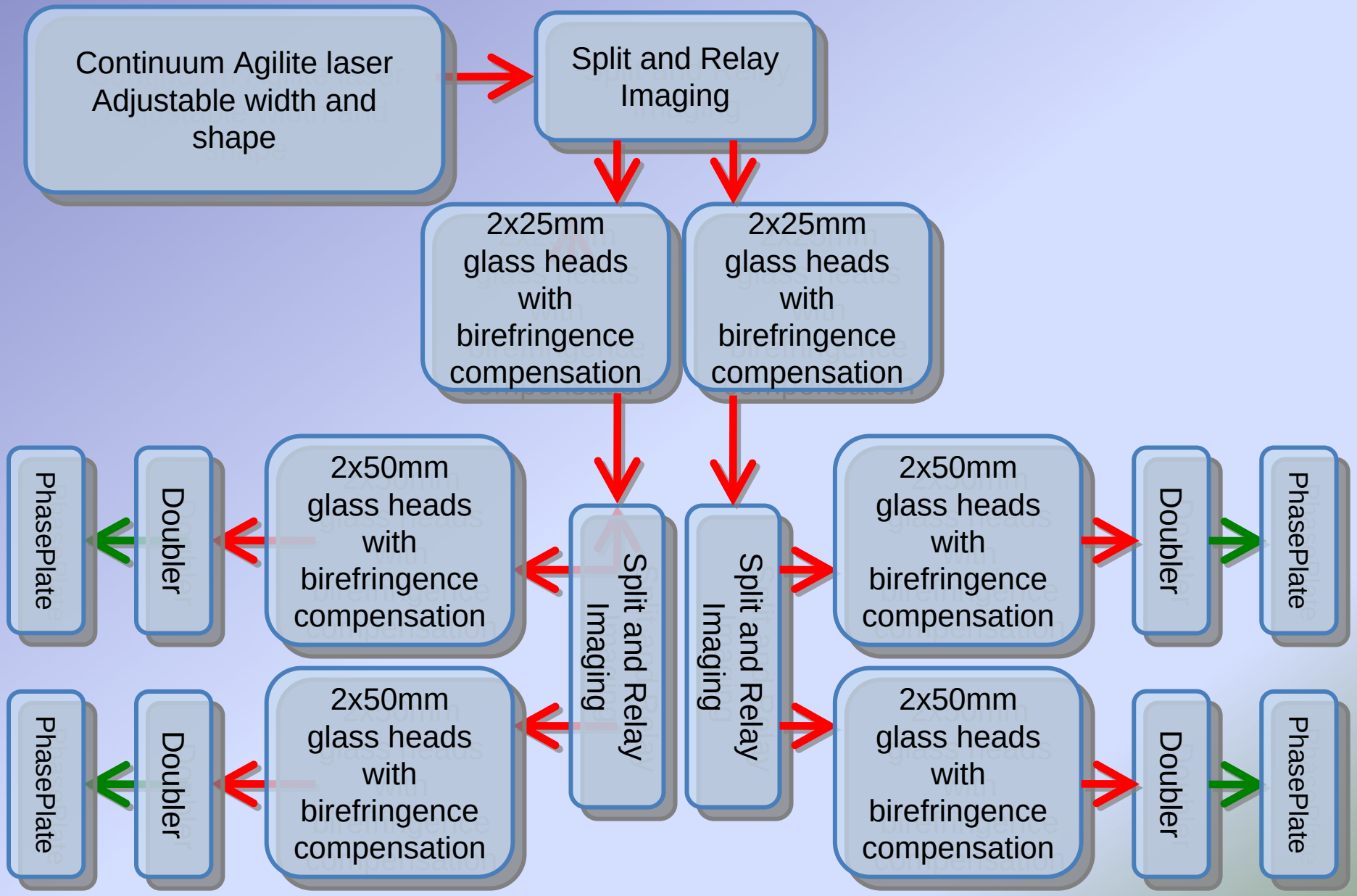

100TW, 35 fs laser

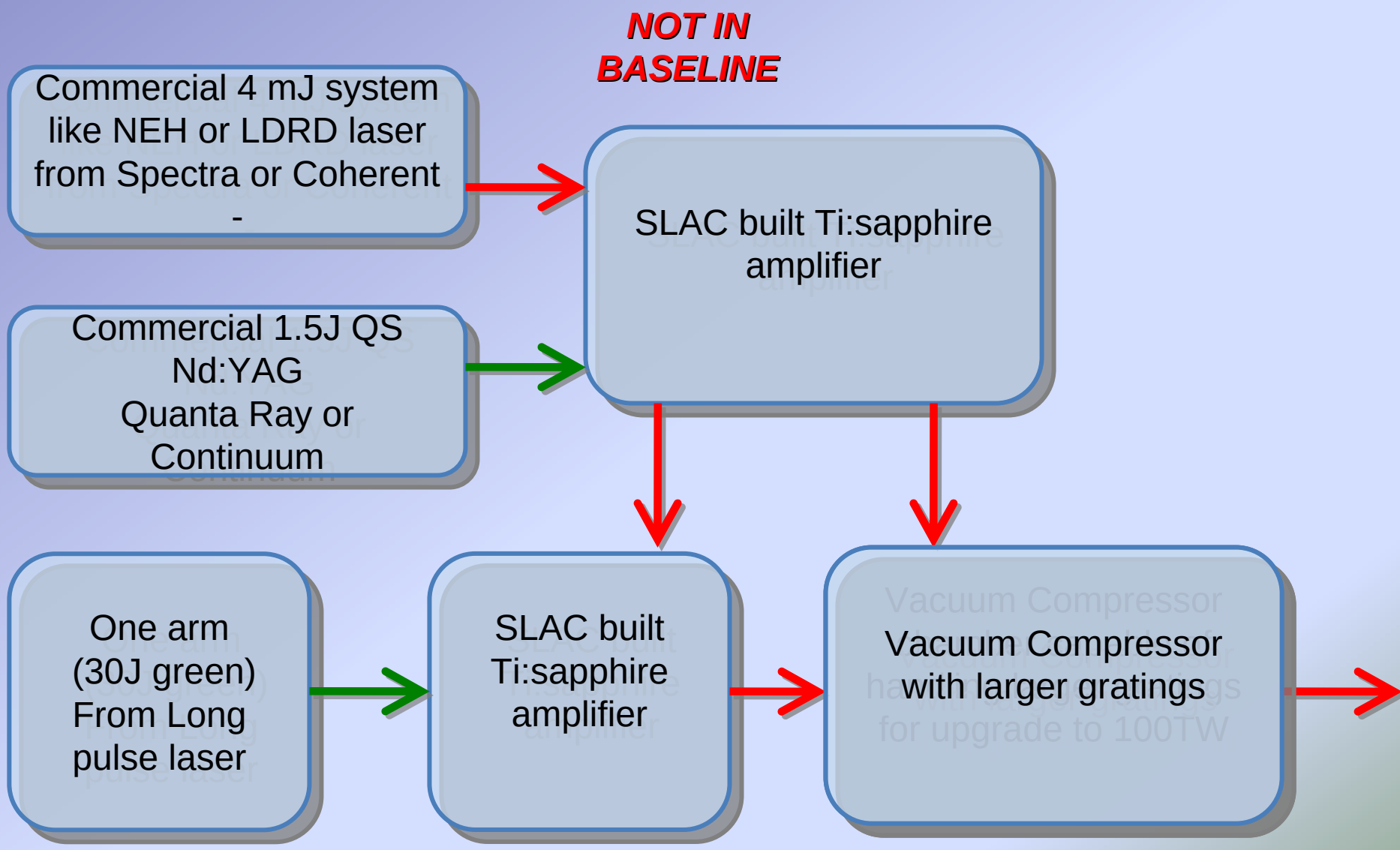

Helen Laser

NOT IN BASELINE

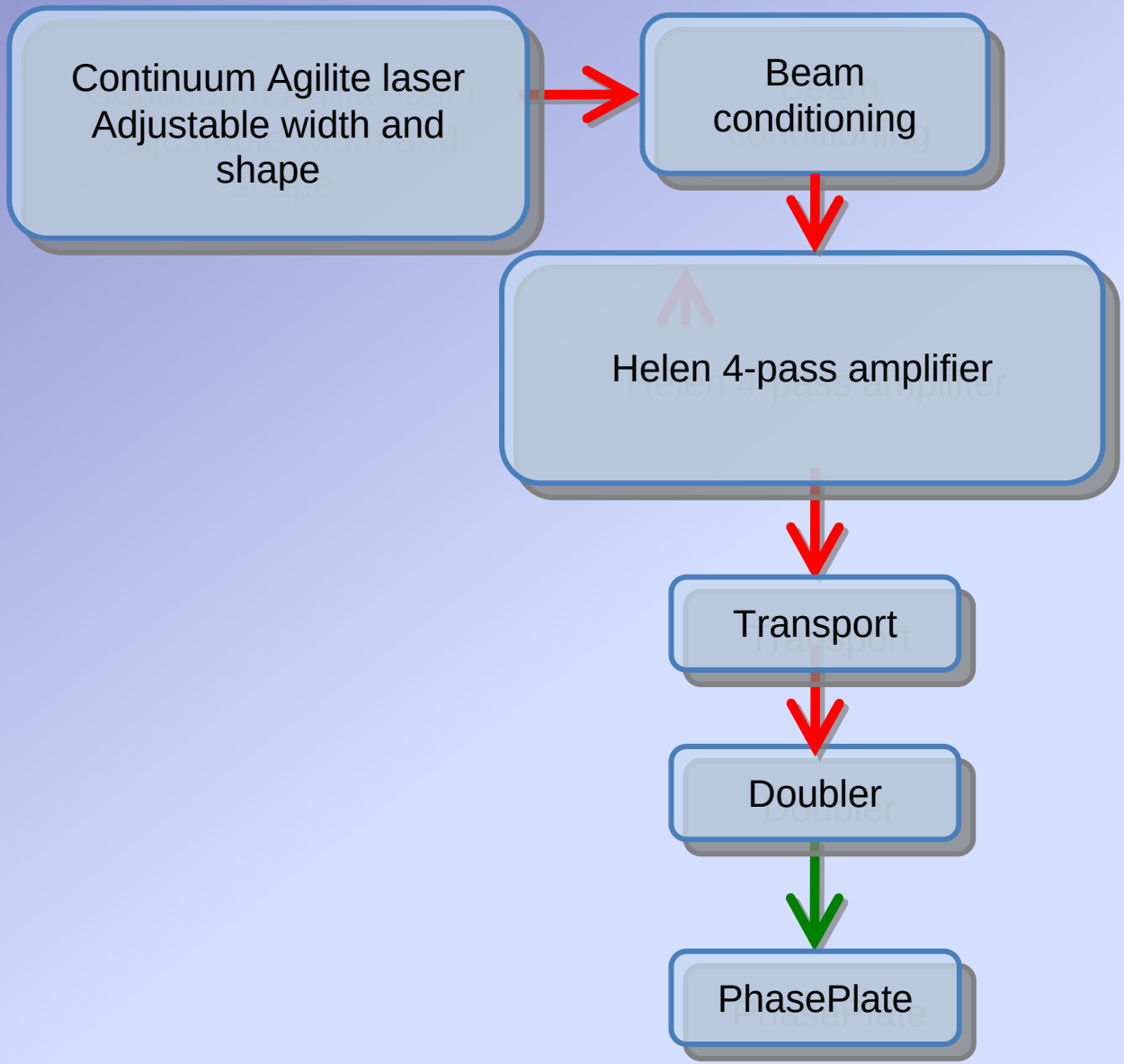

Target Diagnostics: examples

Thomson Scattering: two spectrometers measure collective and non-collective scattering

LCLS Thomson scattering experiment

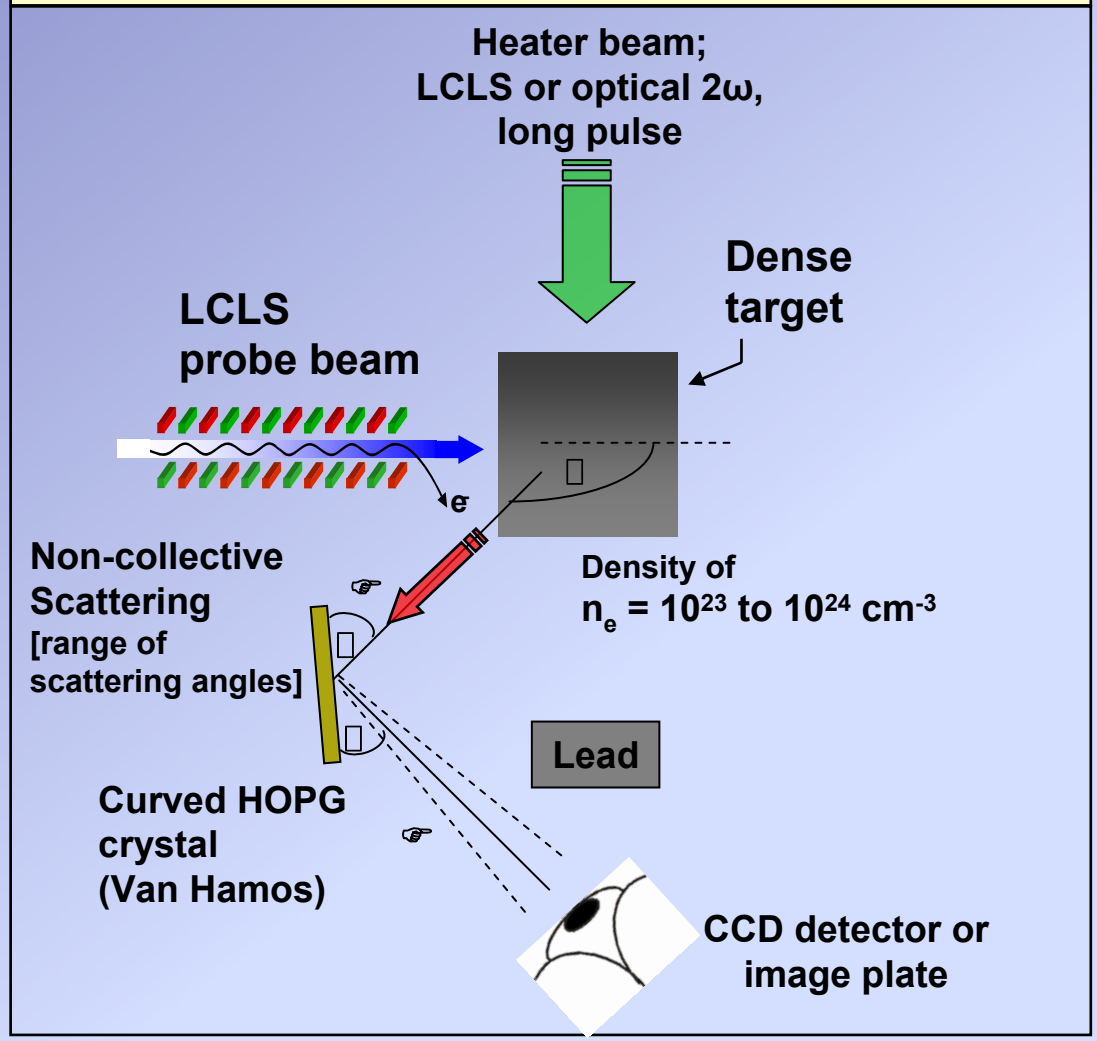

Requirements :

- —Two ports
- —Two spectrometers
- —HOPG ZYA curved, ZYA flat
- —Two detectors
- —Two different scattering angles θ
- —Shielding
- —Distance 12 cm < F < 30 cm
- —Bragg angle 20˚ < θ < 60˚
- —Filtering (Be, Al, Ti)

Spectrometer setting	Curved crystal	Flat crystal (F>100 mm)
Cl K□ [2.6 keV] (1st order)	F = 182 mm (7.2 eV/mm)	F = 200 mm (6.6 eV/mm)
Ti K□ [4.5 keV] (2nd order)	F = 140 mm (11.2 eV/mm)	F = 200 mm (7.8 eV/mm)
Cu K□ [8 keV] (2nd order)	F = 250 mm (31.1 eV/mm)	F = 200 mm (38.8 eV/mm)
Cu K□ [8 keV] (3rd order)	F = 167 mm (25.3 eV/mm)	F = 200 mm (21.1 eV/mm)

EOS: Standard Fourier Domain Interferometry (FDI)

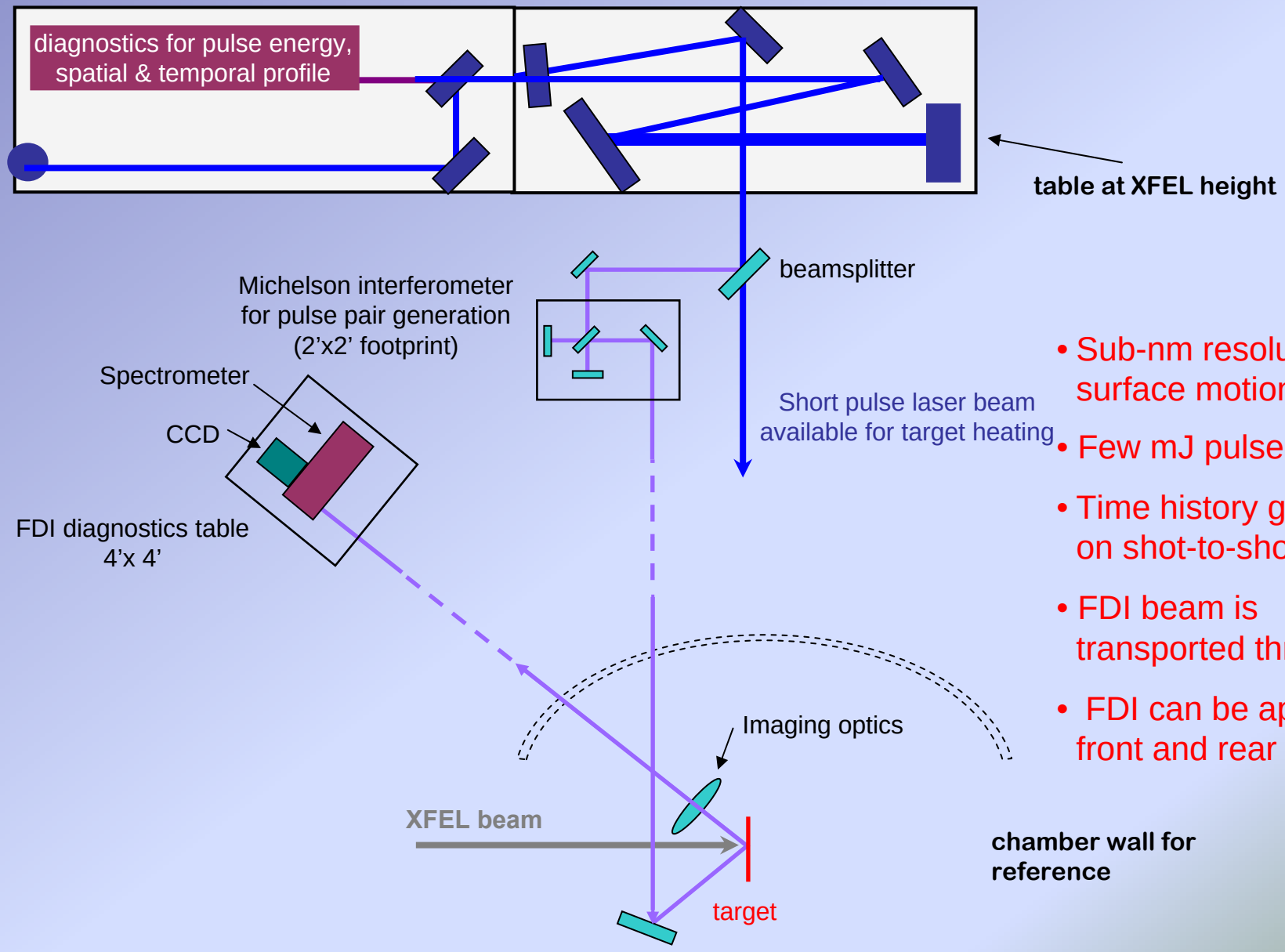

- Sub-nm resolution of surface motion.
- Few mJ pulse energy
- Time history gathered on shot-to-shot base
- FDI beam is transported through air
- FDI can be applied to front and rear of sample

MECI Baseline Components

- X-ray transport, x-ray optics (including focusing), x-ray diagnostics
- Laser systems
  - 4 x 30 J Long Pulse
  - 150 mJ Short Pulse
- Target Chamber
- Target diagnostics
  - FDI
  - VISAR
  - Spectrometers – crystal and grating
  - Streak camera
- Data Acquisition and controls

Some MECi Challenges

- Target diagnostics examples
  - Design to match the 1-10 μm x-ray beam size
  - Design of x-ray spectrometers for Thomson scattering
  - Detectors
- X-ray optics/diagnostics pulse by pulse
  - Focusing optics
  - Timing (x-ray – laser)
  - Leave in intensity – profile
  - Focal spot size

Special Thanks to:

Dick Lee, Roger Falcone, Bill White and Justin Wark