Experimental review of high-energy e^- e^+ and p $\overline{p}$ spectra

Luca Baldini
INFN–Pisa
luca.baldini@pi.infn.it

TeV Particle Astrophysics,
July 15 2009

Outline

- Measurement of the singly charged component of the cosmic radiation at GeV–TeV energies.
- What we measure and what we learn:
  - ≈ 10 talks about it in this conference.
- Experimental techniques and historical review.
  - Bound to be incomplete and not exhaustive.
- Prospects for the near future.

Introduction

- Inclusive spectra: $e^+ + e^-$ and $\overline{p} + p$
  - Electrons, unlike protons, loose energy rapidly by Synchrotron and Inverse Compton: at very high energy they probe the nearby sources.
- Charge composition: $e^+/(e^+ + e^-)$ and $\overline{p}/(\overline{p} + p)$ ratios.
  - e^+ and $\overline{p}$ are produced by the interactions of high-energy cosmic rays with the interstellar gas (secondary production).
  - There might be additional (possibly exotic) sources.
- Different measurements provide complementary information on the origin, acceleration and propagation of cosmic rays.
  - All the pieces of the puzzles must fit in a coherent interpretative (multi-messenger) framework.

A quick look at the available data

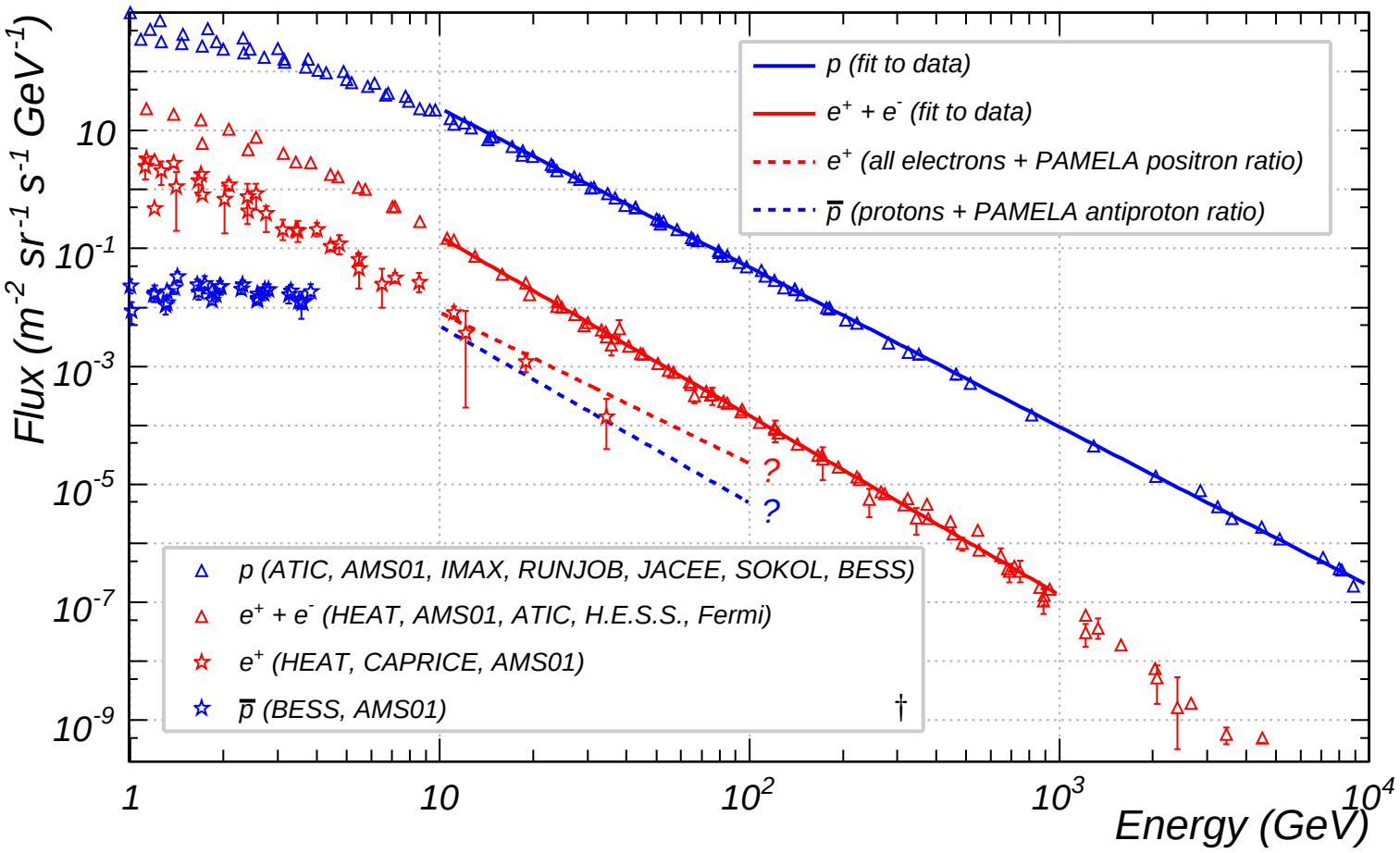

† Data taken from the Cosmic Ray Database maintained by A. Strong and I. Moskalenko

see `http://www.mpe.mpg.de/~aws/propagate.html`

Experimental techniques and detectors

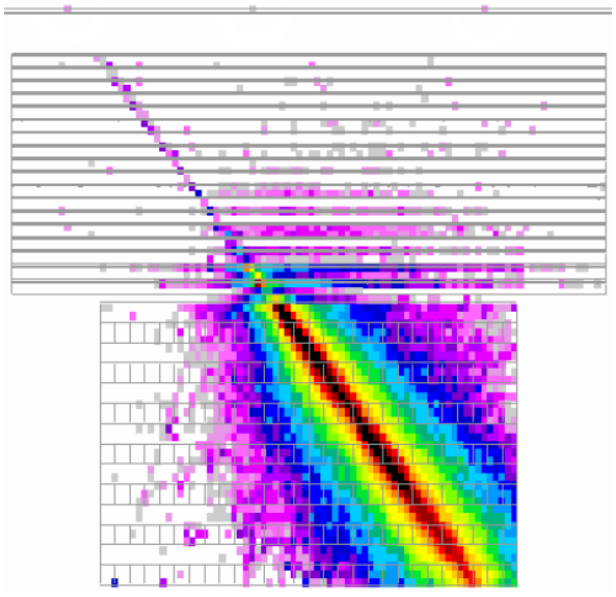

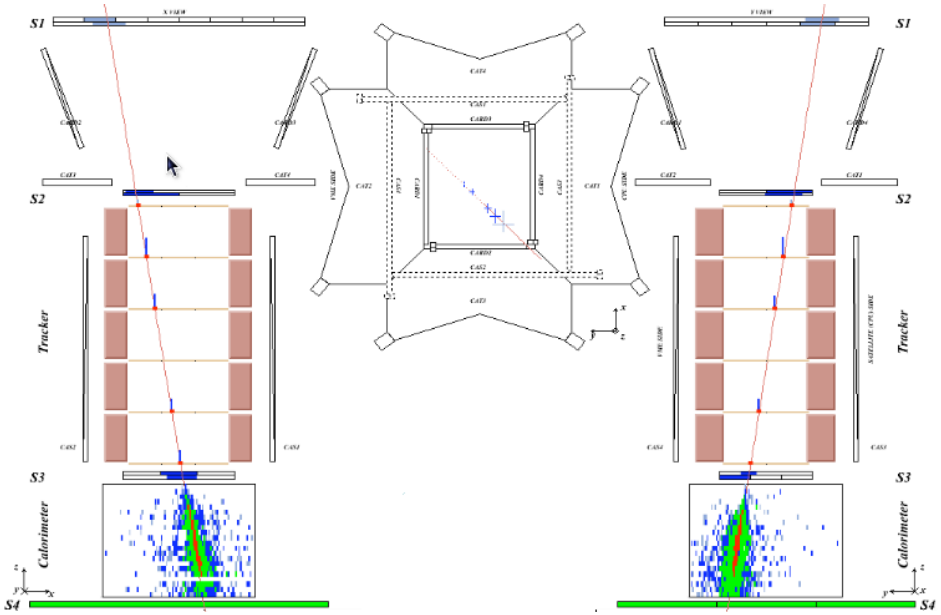

Imaging calorimeters

- Cannot distinguish the charge sign (inclusive spectra).
- Background rejection mainly relying on the different topologies of electromagnetic and hadronic showers.
- Typically feature larger acceptance and energy reach (measurement of the inclusive electron spectrum at high energy).

Magnetic spectrometers

- Can distinguish the charge sign ($e^+/(e^+ + e^-)$ and $\overline{p}/(\overline{p} + p)$ ratios).
- Excellent particle identification—typically include an electromagnetic calorimeter and a TRD or a Čherenkov detector.
- Acceptance and energy reach limited by the magnet's dimensions and bending power (unless operating as an imaging calorimeter).

But that's not the end of the story (more about this in a moment).

Basic formalism

- Geometric factor (or *aperture*, or *etendue*):

$$G_f(E) = A(E) \cdot \Omega(E)$$

in most cases energy-dependent (*effective* G_f), i. e. when:

(i) the acceptance depends on energy (magnetic spectrometers);
(ii) selections are (explicitly or implicitly) energy dependent.

- Exposure factor (or *exposure*):

$$E_f(E) = G_f(E) \cdot T_{obs}$$

effectively determining the number of counts through:

$$N_{E \geq E_0} = \int_{E_0}^{\infty} \frac{\mathrm{dN(E)}}{\mathrm{dE\ dt}} E_f(E)\, \mathrm{dE}$$

The formalism at work...

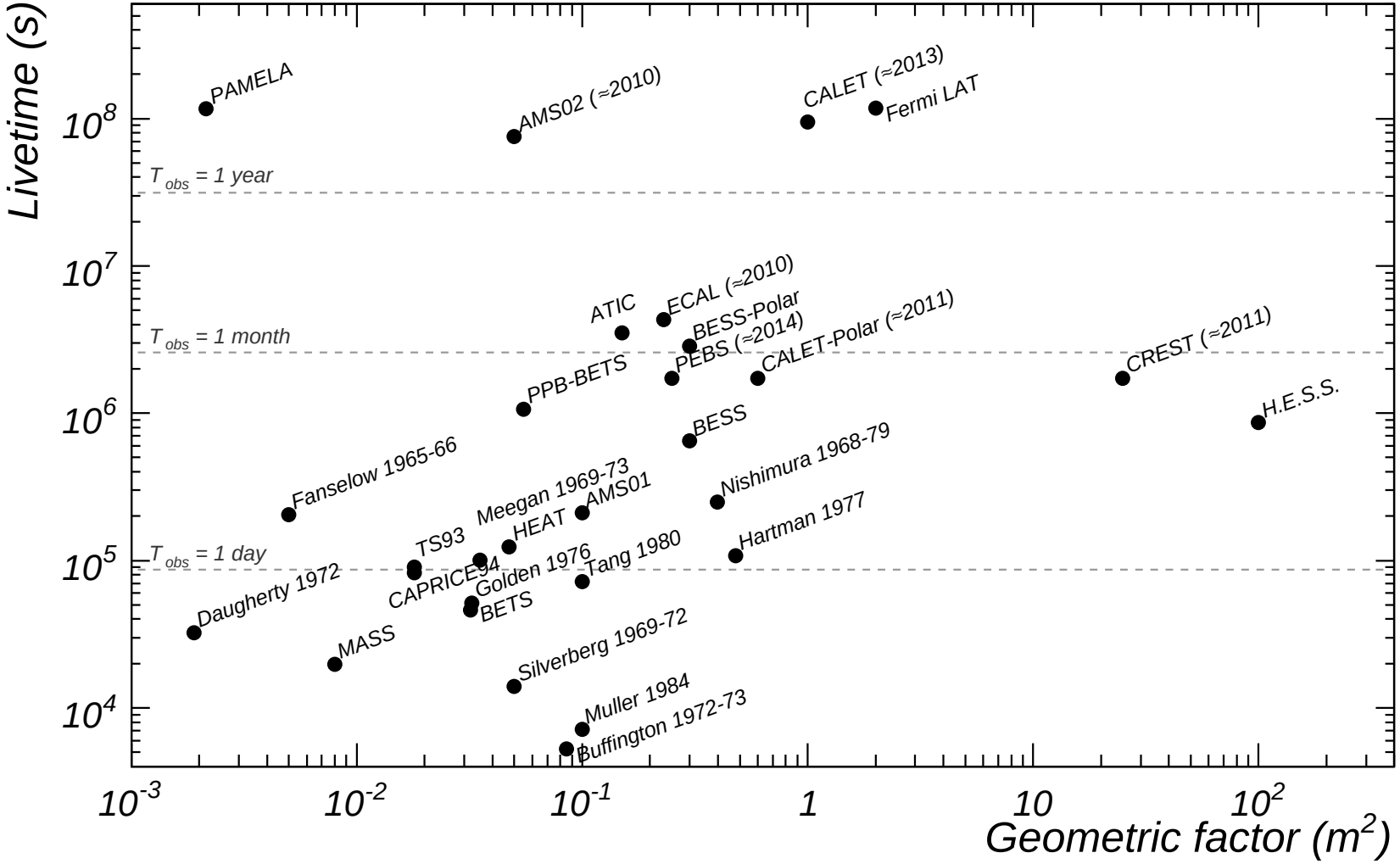

The formalism at work...

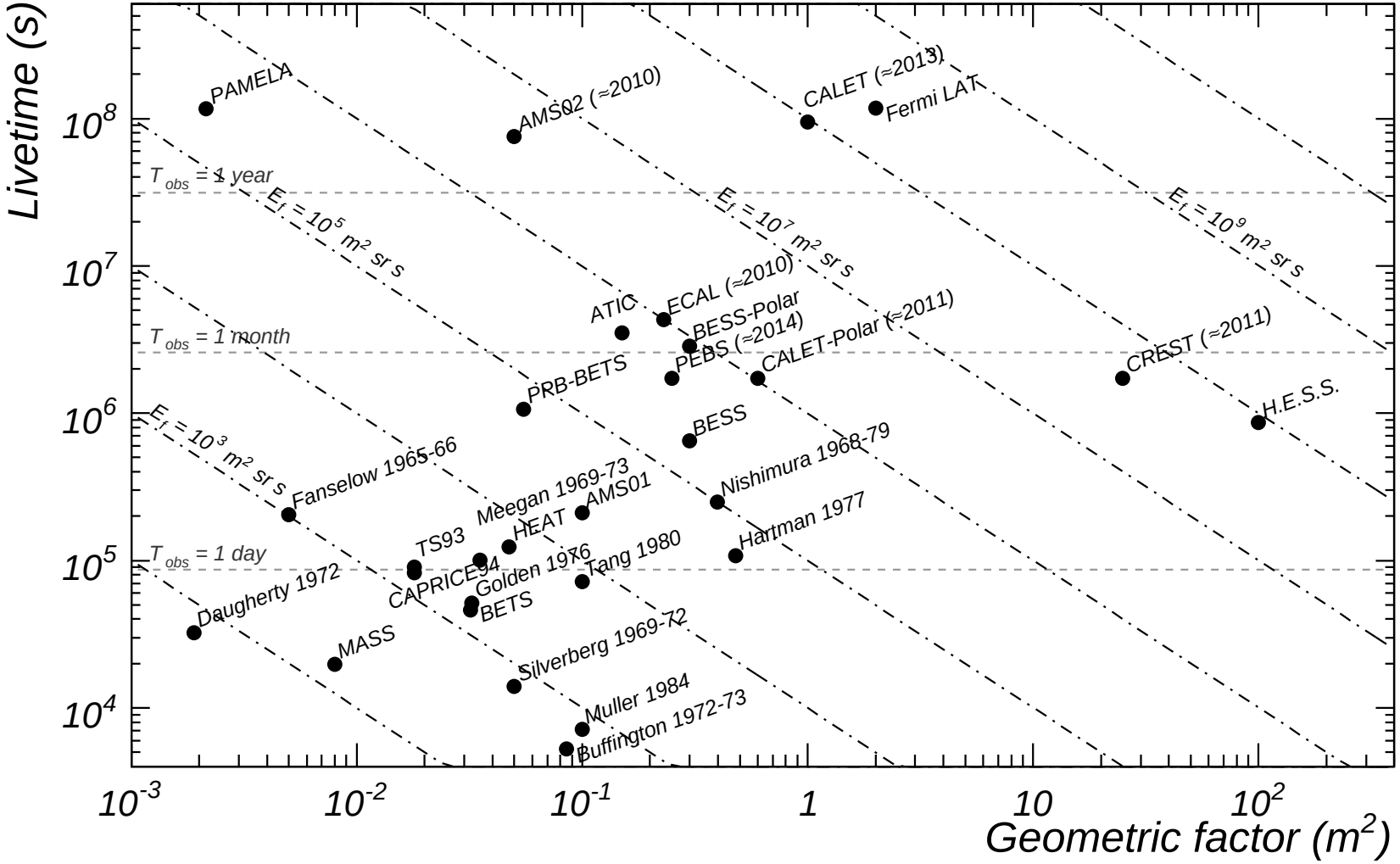

- The exposure factor determines the statistics.

The formalism at work...

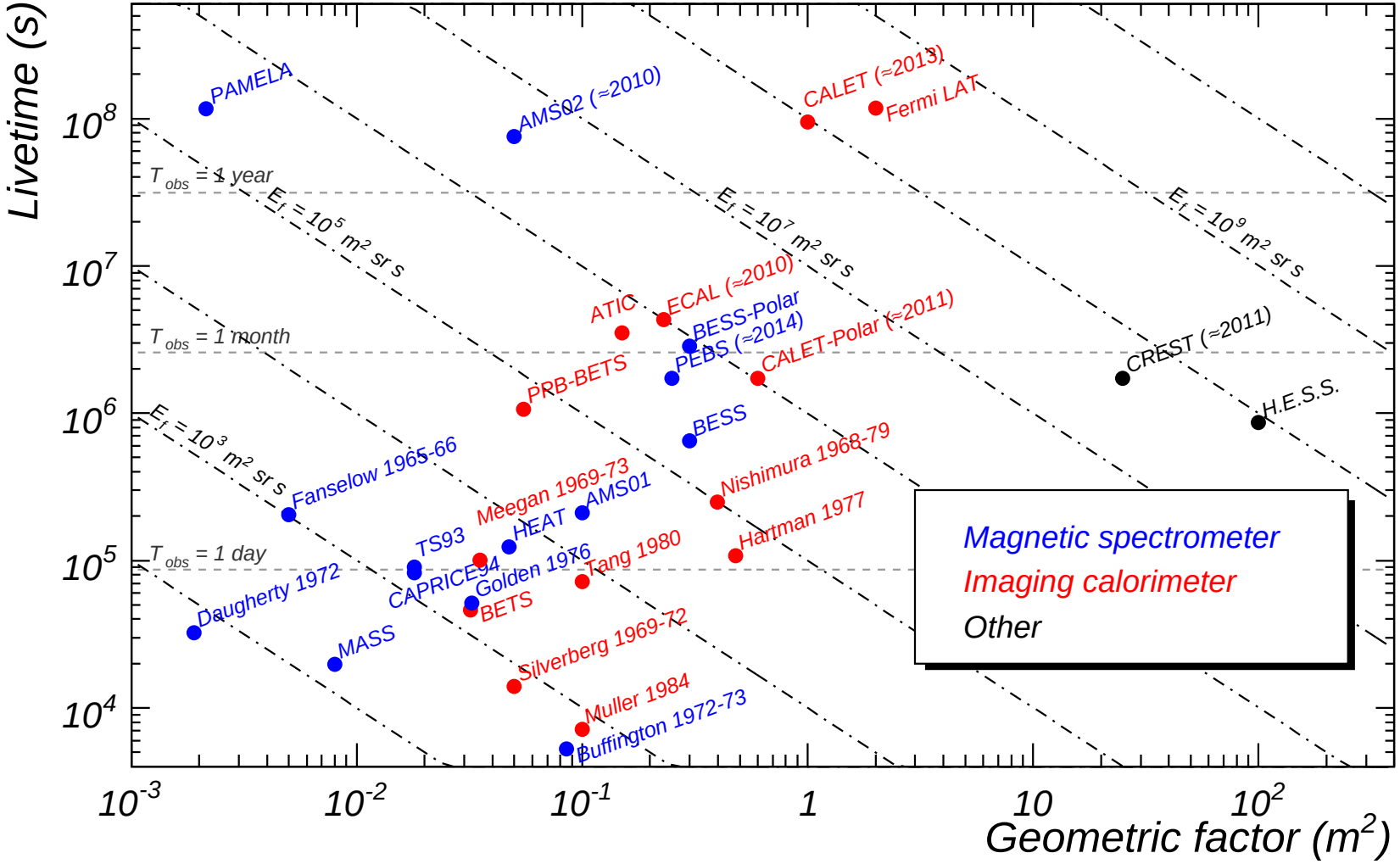

- The exposure factor determines the statistics.
- Imaging calorimeters (vs. spectrometers) feature larger G_f.

The formalism at work...

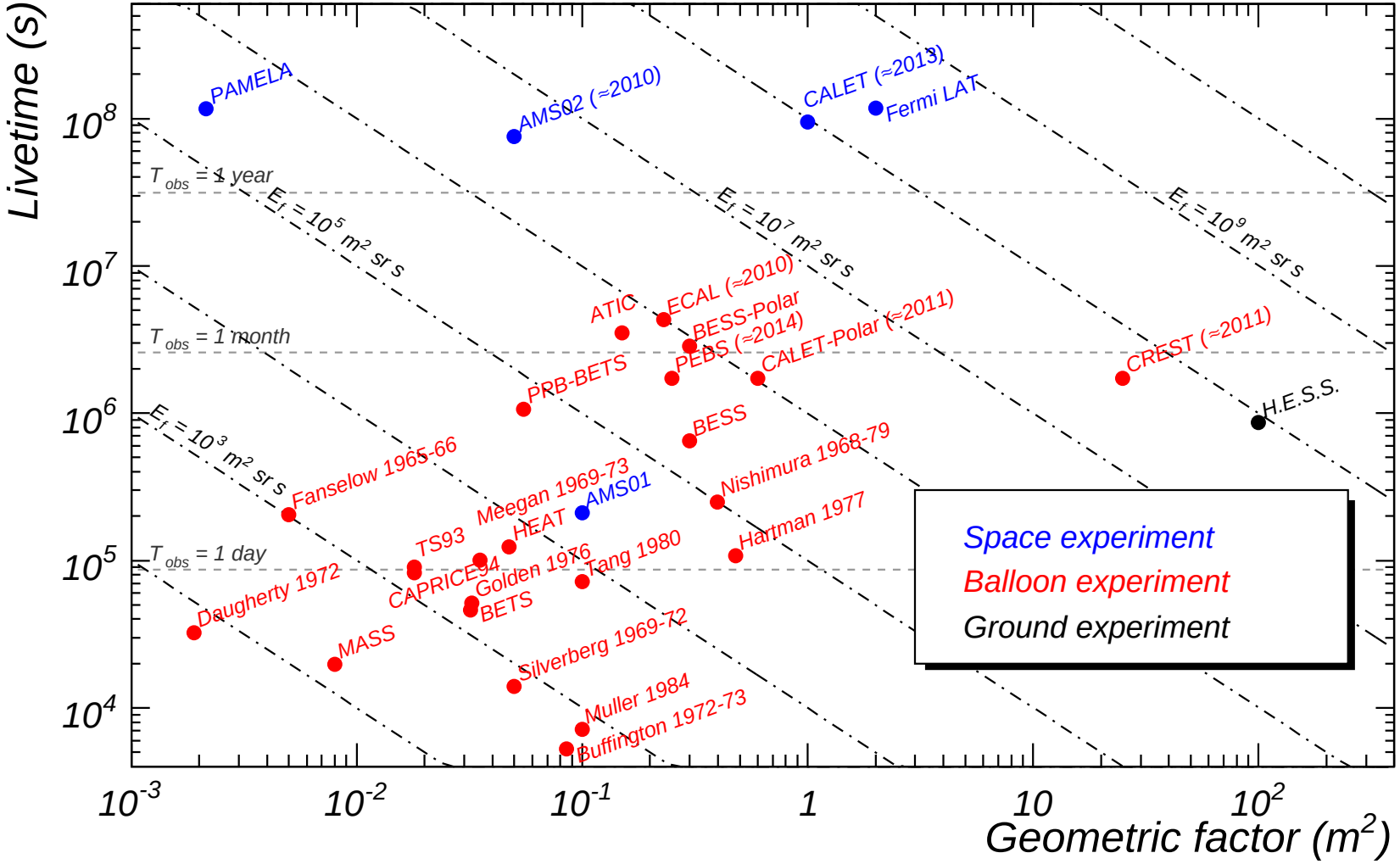

- The exposure factor determines the statistics.
- Imaging calorimeters (vs. spectrometers) feature larger G_f.
- Space (vs. balloon) experiments feature longer livetime.

Segue: Long Duration Balloon Flights

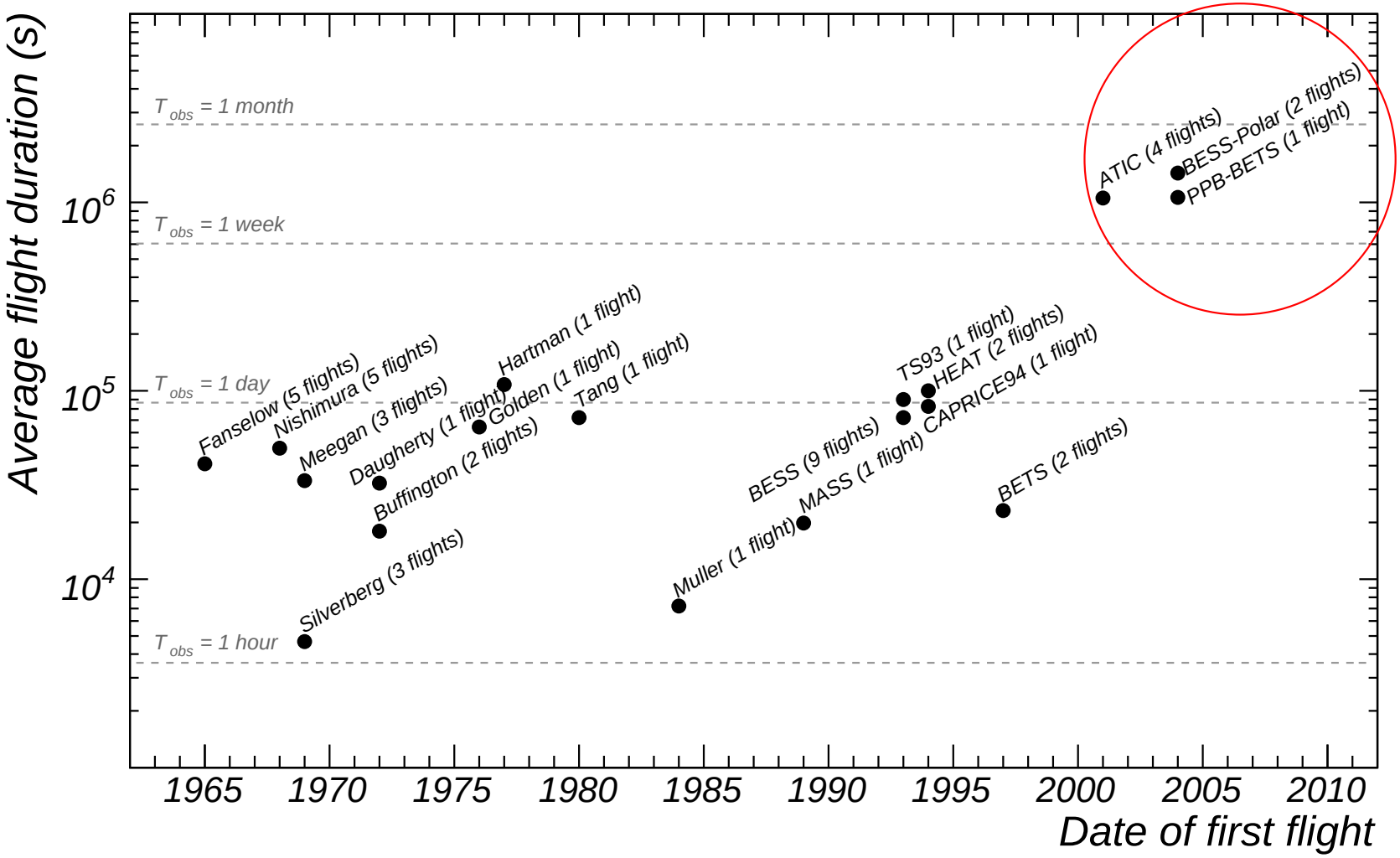

- Active development for Long Duration and Ultra Long Duration flights ongoing (more than one order of magnitude improvement).

Segue: Long Duration Balloon Flights

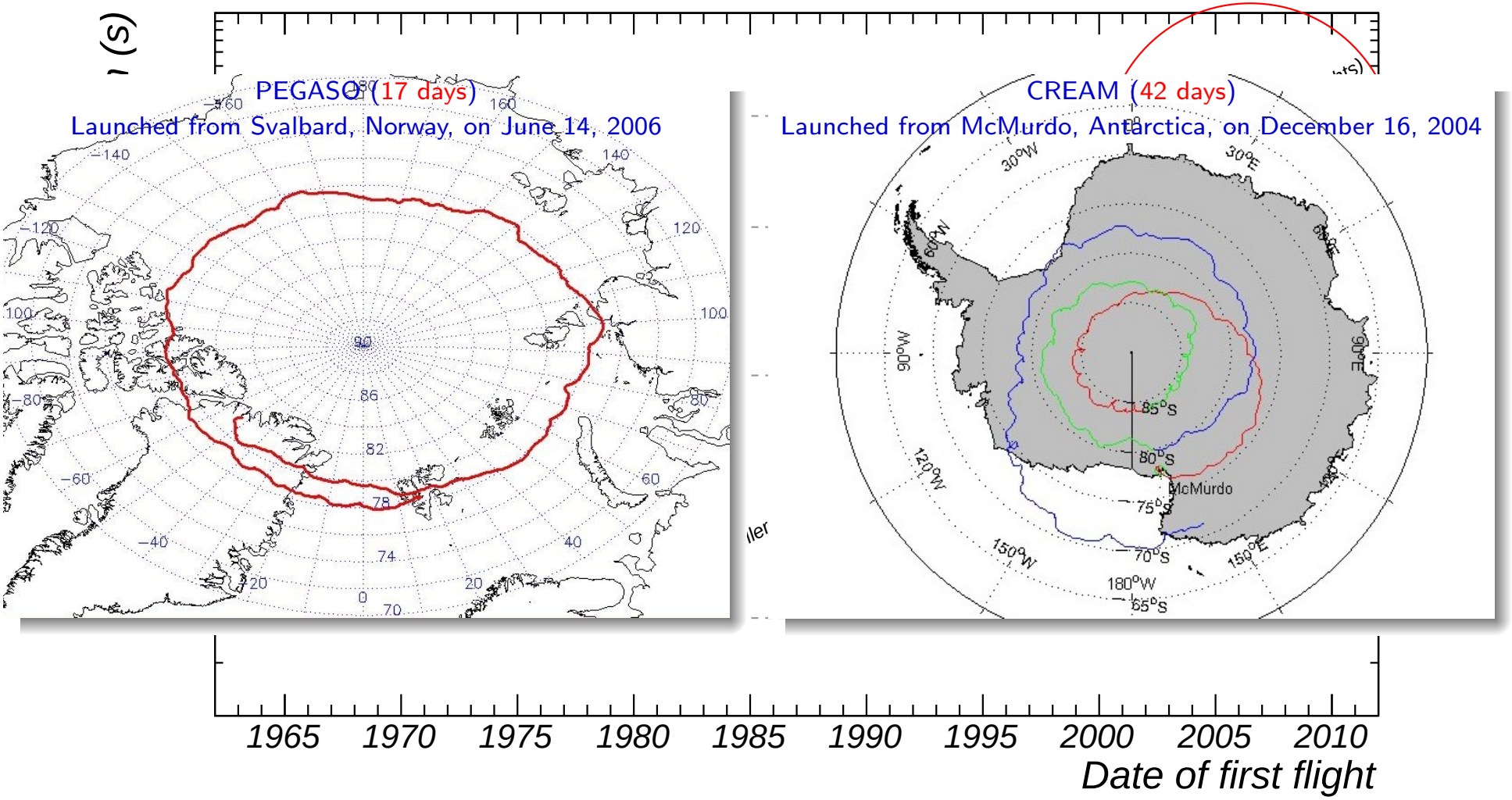

- Active development for Long Duration and Ultra Long Duration flights ongoing (more than one order of magnitude improvement).
- Complete (multiple) circumpolar trajectories achieved.

CR measurements and backgrounds

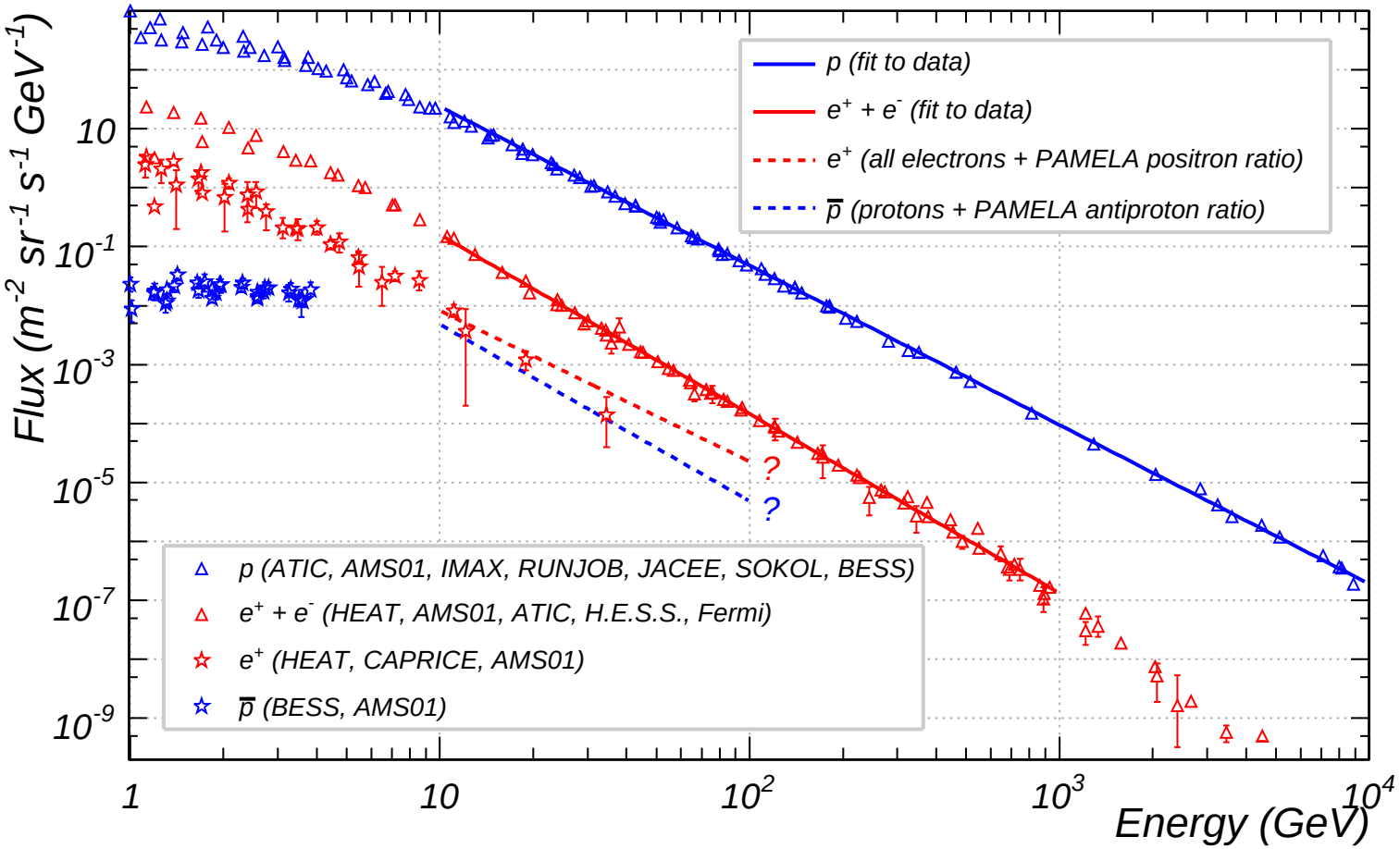

Inclusive spectra: $e^+ + e^-$ and $\overline{p} + p$

- p dominate the CR flux, energy measurement is more challenging than background rejection.
- p is the critical source of background for the $e^+ + e^-$ measurement.

$e^+/(e^+ + e^-)$ and $\overline{p}/(\overline{p} + p)$ ratios

- Once the the charge sign has been identified, the antiparticle competes with the particle of the same sign...
- ...i.e. $\overline{p}$ with e and e^+ with p.

CR measurements and backgrounds

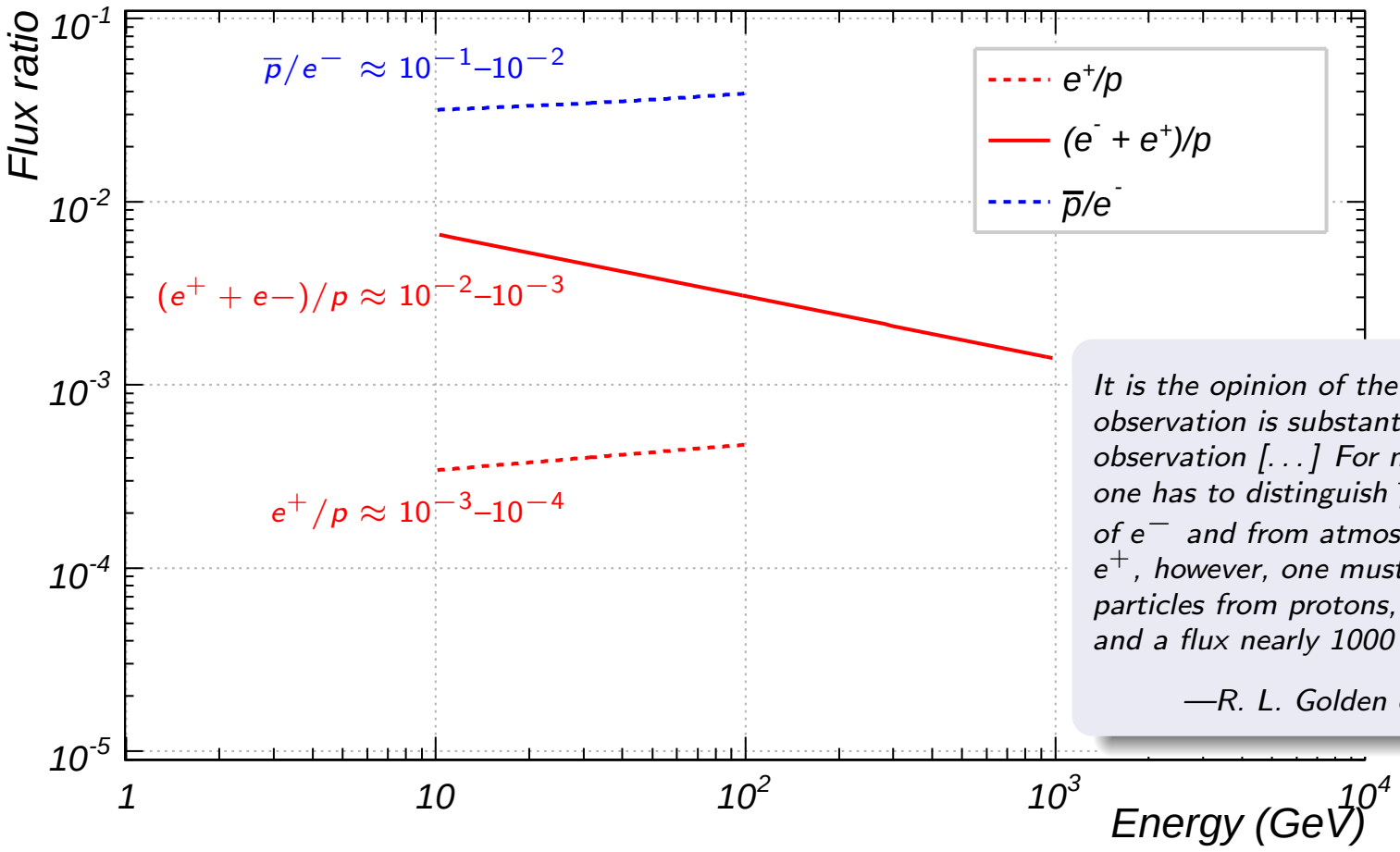

It is the opinion of the investigators that the e^+ observation is substantially more difficult than the $\overline{p}$ observation [...] For negatively charged particles one has to distinguish $\overline{p}$ from a 20 times higher flux of e^- and from atmospheric mesons. In the case of e^+, however, one must separate the desired particles from protons, which have the same charge and a flux nearly 1000 times as great.

—*R. L. Golden et al., A&A* **188**, *145 (1987)*

Inclusive spectra: $e^+ + e^-$ and $\overline{p} + p$

- p dominate the CR flux, energy measurement is more challenging than background rejection.
- p is the critical source of background for the $e^+ + e^-$ measurement.

$e^+/(e^+ + e^-)$ and $\overline{p}/(\overline{p} + p)$ ratios

- Once the the charge sign has been identified, the antiparticle competes with the particle of the same sign...
- ...i.e. $\overline{p}$ with e and e^+ with p.

Positron fraction: the early days

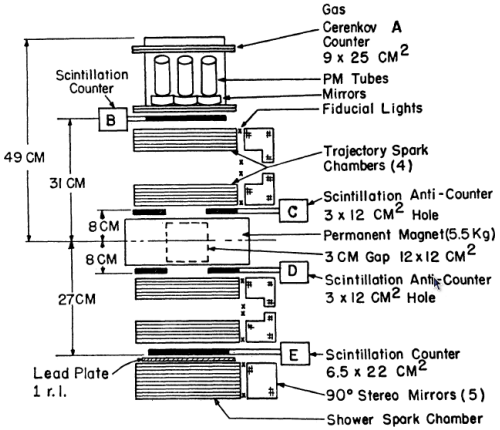

Fanselow (1965–66)
170 MeV–14.3 GeV

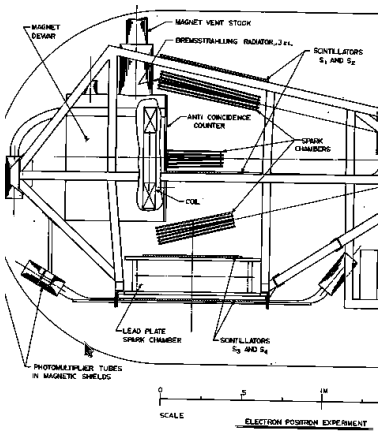

Buffington (1972–73)
4–50 GeV

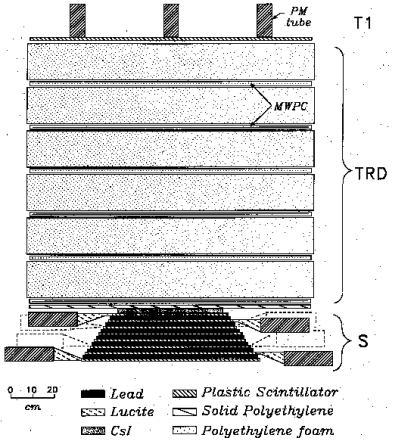

Muller (1984)
10–20 GeV

1970

Daugherty (1972–74)
20–800 MeV

1980

MASS (1989)
1.3–26 GeV

1990

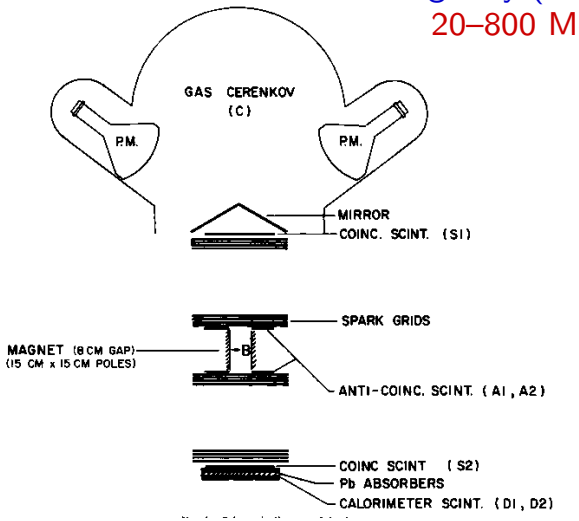

Detector concepts

- Magnetic spectrometer (charge sign and momentum).
- Čherenkov detector and shower detector (*calorimeter*) for background rejection.
- Scintillators (hardware trigger).
- Bremsstralung radiator, east-west asymmetry in the geomagnetic cutoff...

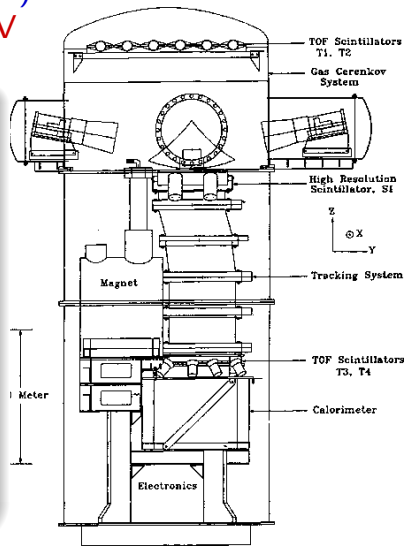

The Astrophysical Journal, 342:807–813, 1989 July 15

THE NATURE OF THE COSMIC-RAY ELECTRON SPECTRUM, AND SUPERNOVA REMNANT CONTRIBUTIONS

Ahmed Boulares
Physics Department, Space Physics Laboratory, University of Wisconsin–Madison
Received 1988 October 24; accepted 1988 December 29

ABSTRACT

We examine the observed cosmic-ray (CR) electron spectrum and positron fraction $e^+/(e^- + e^+)$ spectrum above 1 GeV, and find that a deconvolution of the total spectrum into three components is necessary because of the increase of $e^+/(e^- + e^+)$ above 5 GeV: (1) Secondary electrons $e^\pm$ from the interaction of the CR protons with the interstellar gas provide the total e^+ for energies less than 3 GeV, but for energies above 3 GeV these electrons cannot account for the observed positron flux; (2) Electrons (e^-) generally thought to arise from supernova remnants (SNRs), probably via shock acceleration, dominate the total spectrum for

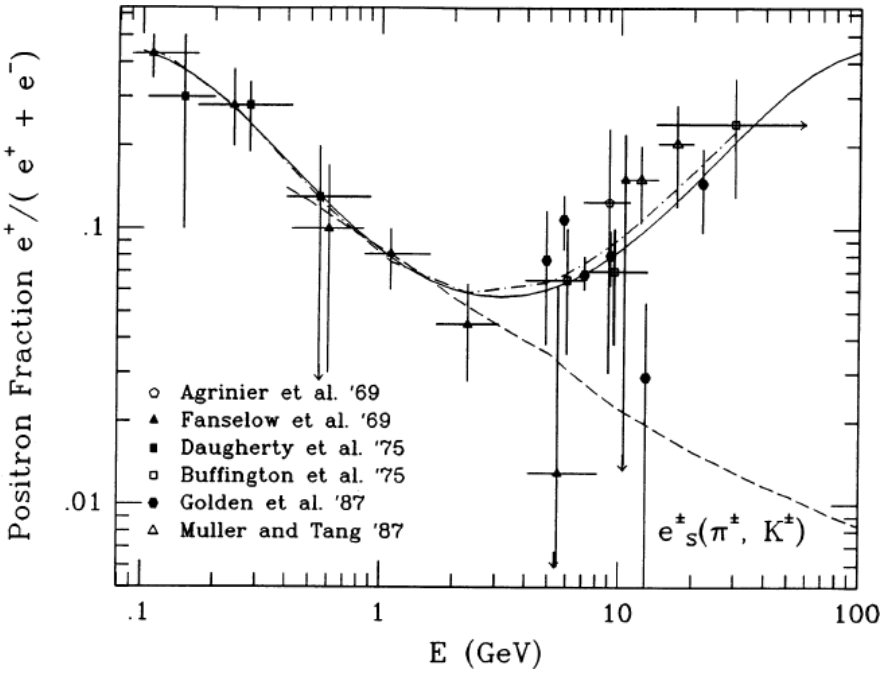

more or less for the observed positron flux between 0.1 and 3 GeV.

At energies above ~20 GeV there is a deficit of primary electrons from SNR's, and other *nearby* sources must dominate. There are many suggested sources of electrons and positrons at high energy: Type I SN explosions (Colgate and Johnson 1960; Colgate 1983); pulsar magnetospheres (Gunn and Ostriker 1969; Arons 1983); dark matter annihilation (Rudaz and Stecker 1988). Most of the positrons are produced by pair production in these sources.

Positron fraction: the latter days

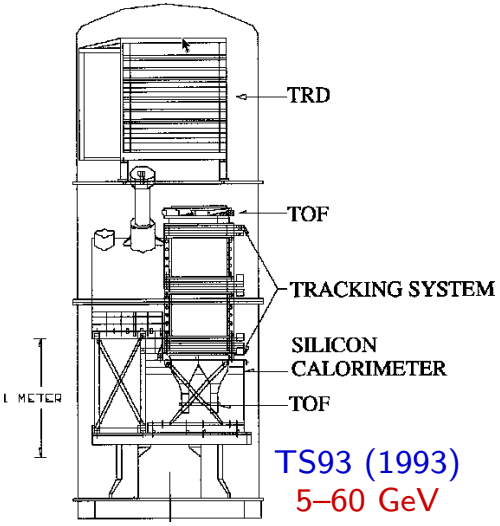

TS93 (1993)
5–60 GeV

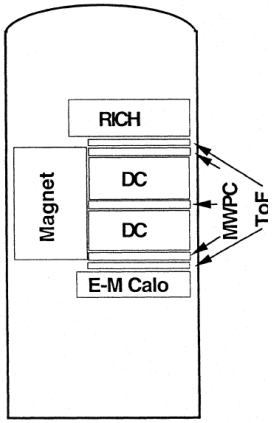

CAPRICE94 (1994)
0.8–14 GeV

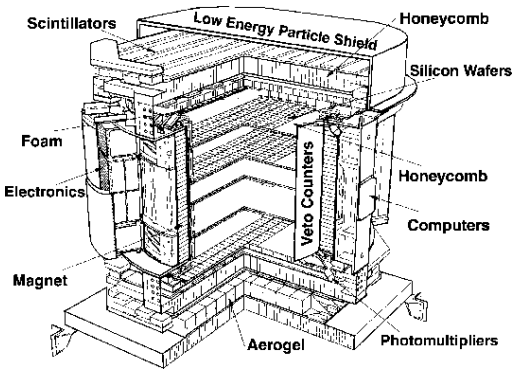

AMS01 (1998)
1–30 GeV

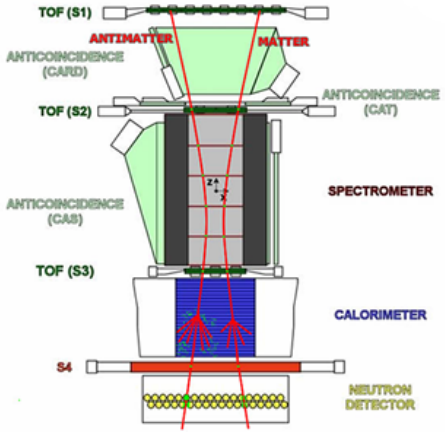

PAMELA (2006–??)
1.5–100 GeV

1990

HEAT (1994–95)
1–50 GeV

2000

HEAT-pbar (2000)
5–15 GeV

2010

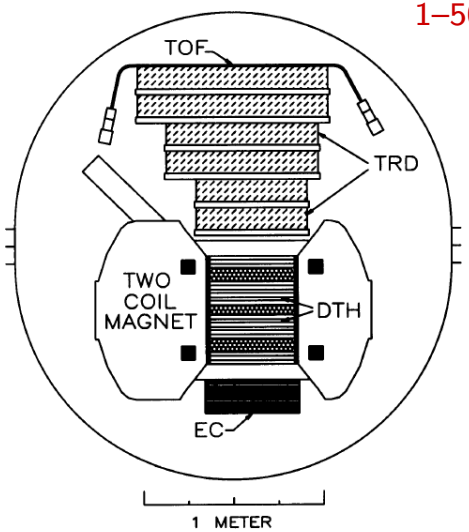

Detector concepts

- TOF for the measurement of β and charge magnitude.
- TRD for electron-hadron discrimination.
- *Modern calorimeters*: shower topology, energy measurement, energy-momentum matching.

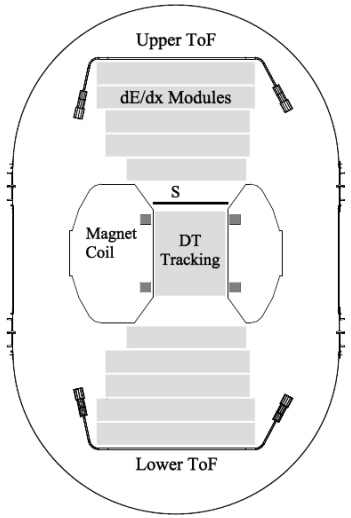

Antiproton fraction

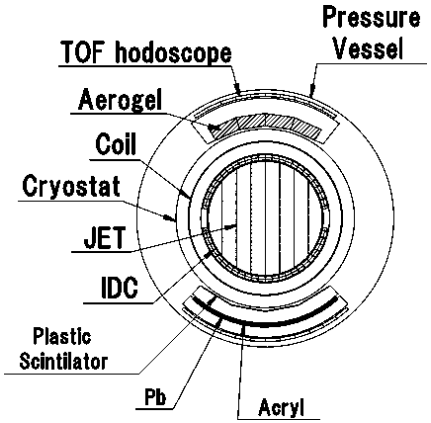

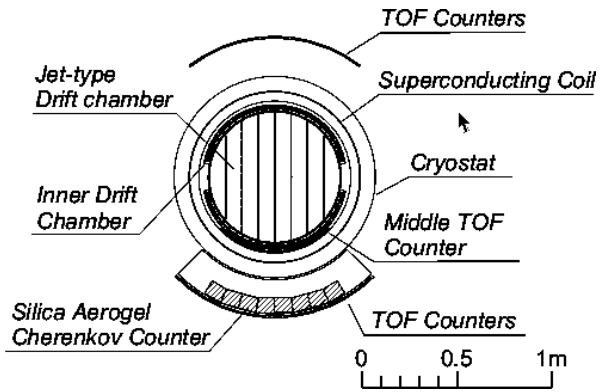

Bogomolov (1972–77)
2–5 GeV

BESS (1993–2000)
150 MeV–4.2 GeV

CAPRICE94 (1994)
620 MeV–3.19 GeV

HEAT-pbar (2000)
4–50 GeV

BESS-Polar (2004–2007)
100 MeV–4.2 GeV

1990

2000

2010

Golden (1979)
5.6–12.5 GeV

MASS91 (1991)
3.4–19 GeV

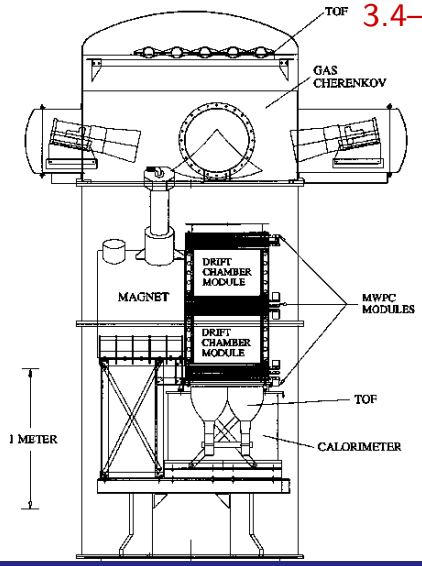

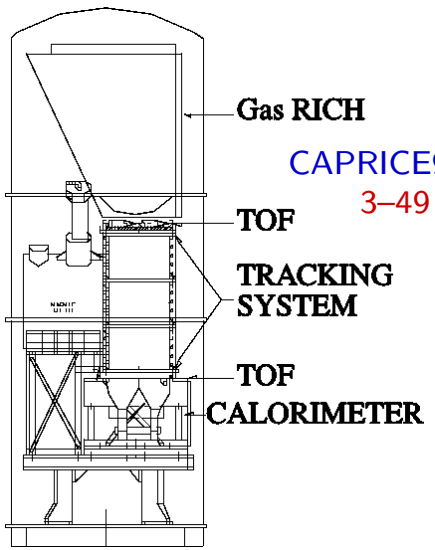

CAPRICE98 (1998)
3–49 GeV

PAMELA (2006-??)
1–100 GeV

Positron and antiproton fractions: 2008–09

NATURE|Vol 458|2 April 2009

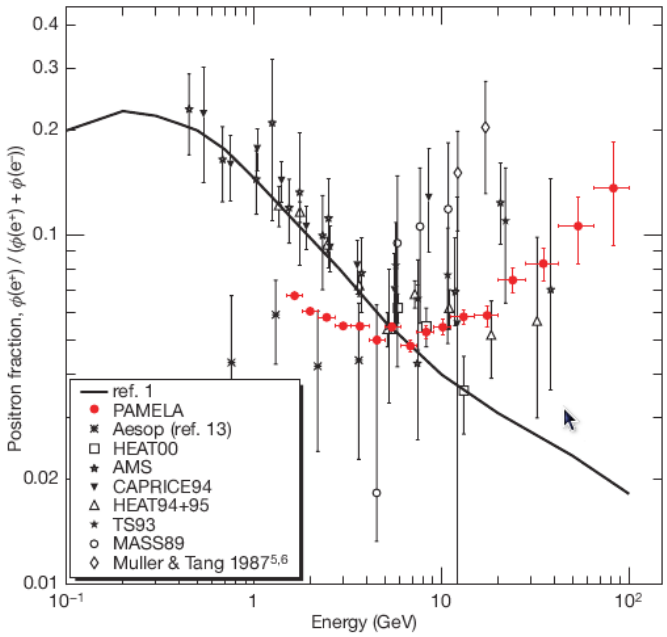

PRL 102, 051101 (2009) PHYSICAL REVIEW LETTERS week ending 6 FEBRUARY 2009

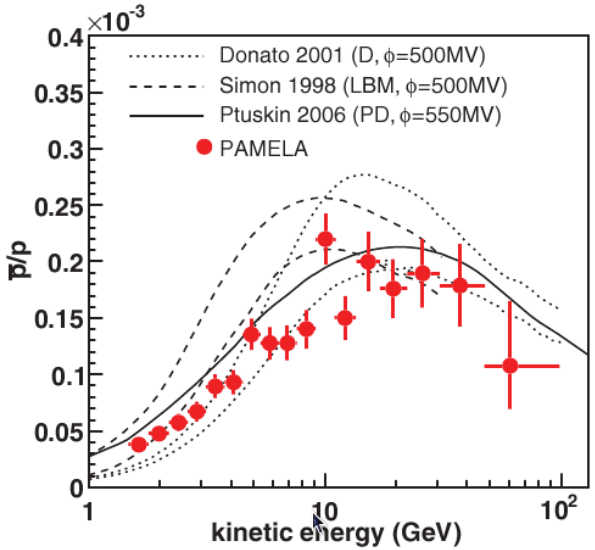

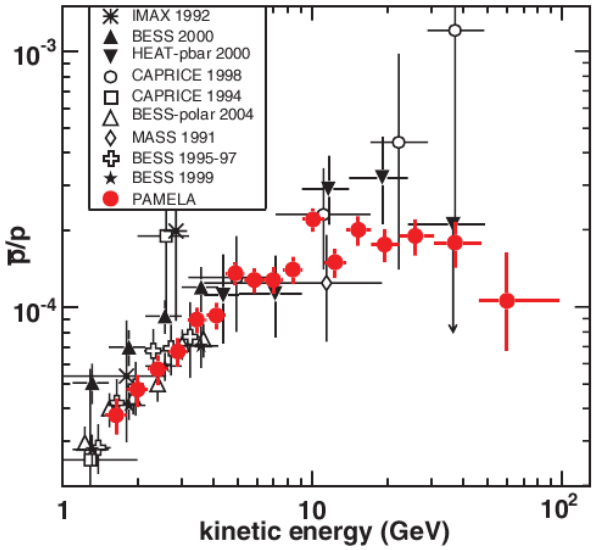

- *Anomalous* rise in the positron fraction above 10 GeV;
- antiproton fraction consistent with secondary production.
- Several different viable interpretations ($>$ 200 papers over the last year): more data needed!

All electron inclusive spectrum

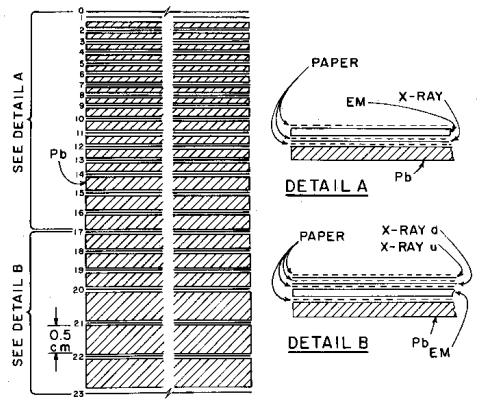

Emulsion chambers (1968–79)
30 GeV–1.5 TeV [8.2 r. l.]

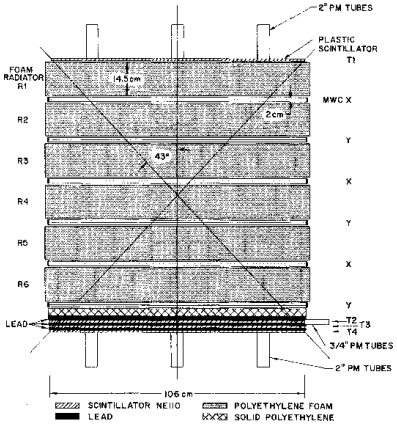

Hartman (1977)
9–300 GeV [8 r. l.]

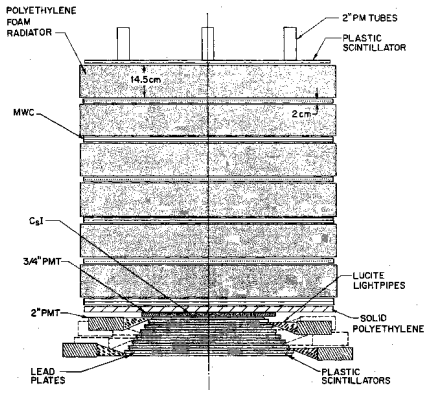

Tang (1980)
4–280 GeV [18.5 r. l.]

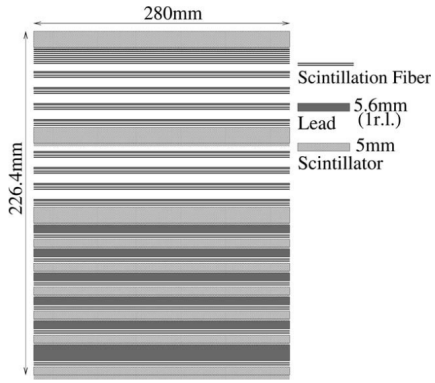

PPB-BETS (2004)
10 GeV–1 TeV [9 r. l.]

1970

1980

2000

Meegan (1969–73)
6–100 GeV [33.7 r. l.]

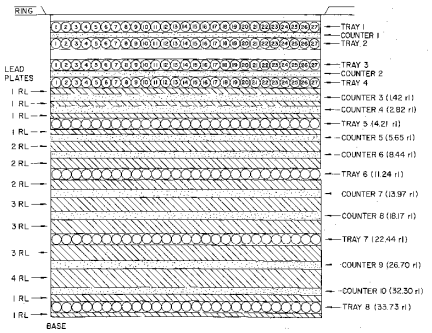

Detector concepts

- Imaging calorimeters (energy measurement *and* background rejection).
- Many different implementations explored.

BETS (1997–98)
10–100 GeV [7.3 r. l.]

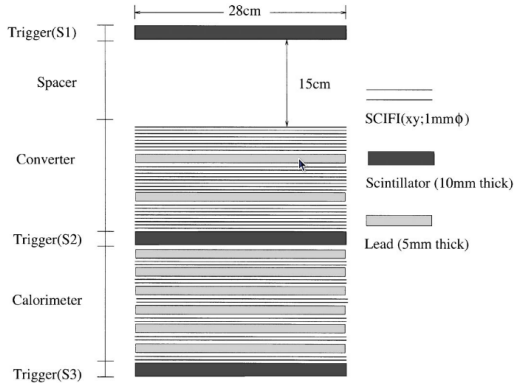

All electron inclusive spectrum

ATIC (Advanced Thin Ionization Calorimeter)

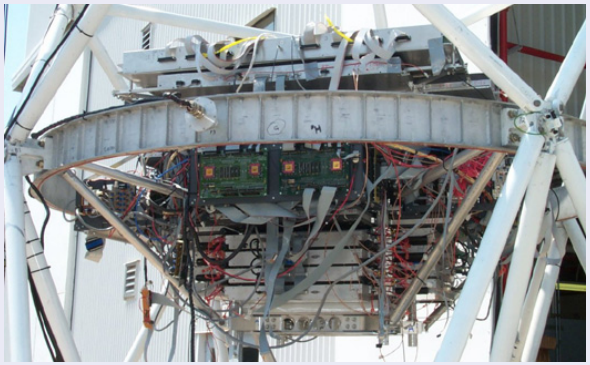


- Si matrix + C target + BGO calorimeter.
- Primary goal: CR hadronic component.

H.E.S.S. (High Energy Stereoscopic System)

- Array of Čherenkov telescopes.
- Primary goal: study of VHE γ-ray sources.

Fermi LAT (Large Area Telescope)

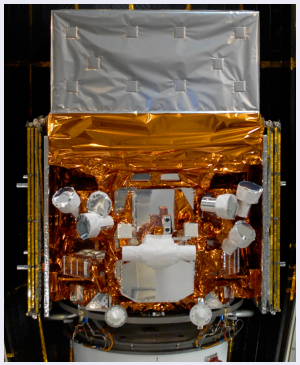


- Pair conversion telescope (Si tracker + CsI calorimeter + ACD).
- Primary goal: survey of the HE γ-ray sky.

- All electrons inclusive spectra published by the three experiments in 2008–09.
- None of the experiments specifically designed to detect electrons.

All electron inclusive spectrum

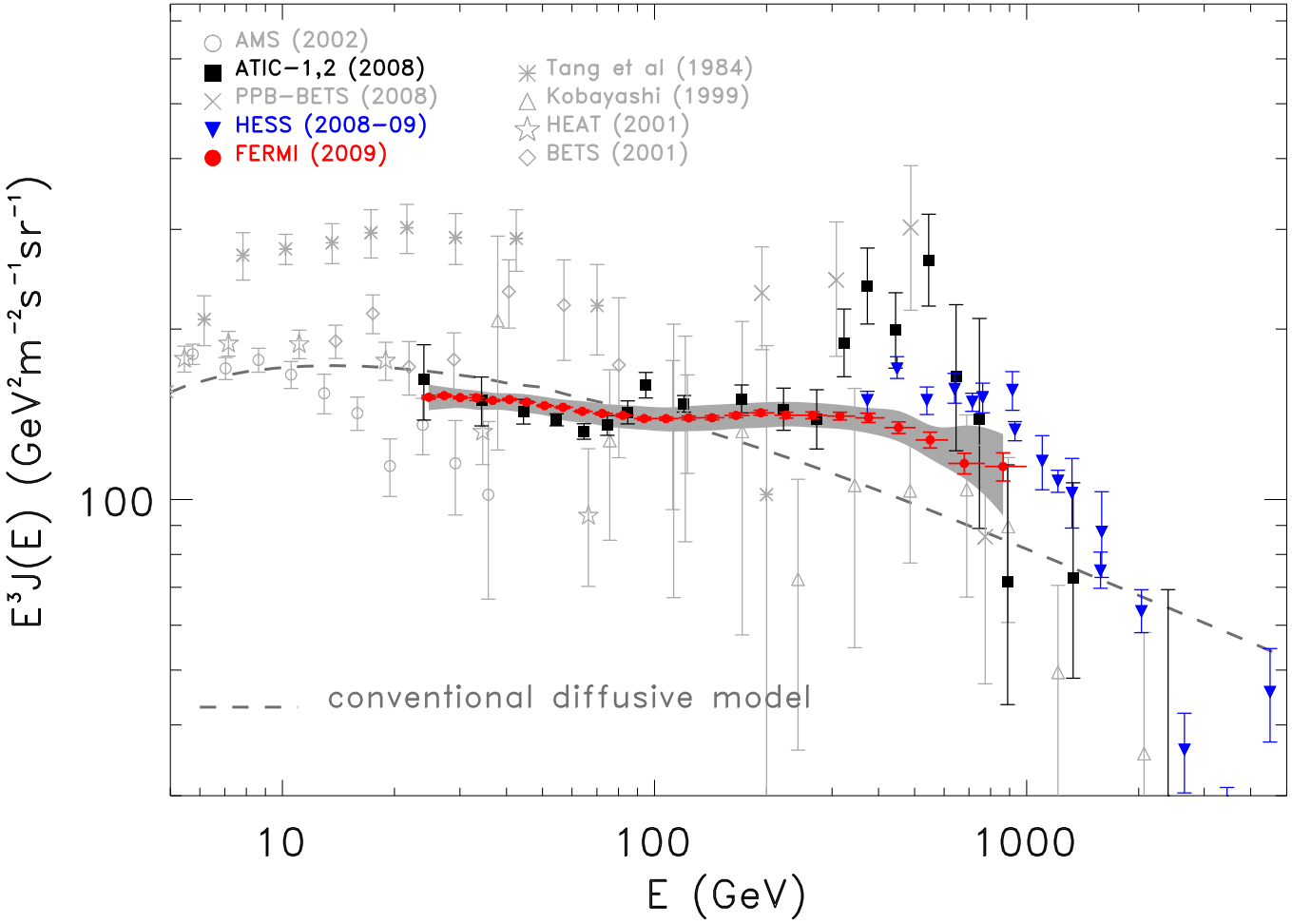

J. Chang et al., Nature **456**, 362 (2008)

F. Aharonian et al., Phys. Rev. Lett. **101**, 261104 (2008)

A. A. Abdo et al., Phys. Rev. Lett. **102**, 181101 (2009)

F. Aharonian et al., arXiv:0905.0105v1

Future and perspectives–I

AMS-02 (Alpha Magnetic Spectrometer)

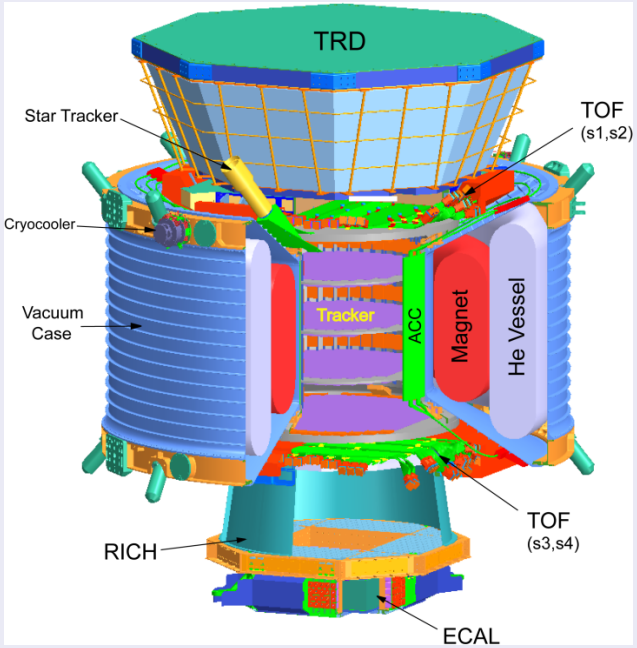

- Three years on the ISS, starting in 2010.
- Positron fraction up to 300 GeV, antiproton fraction up to 450 GeV, all electrons up to 1.5 TeV.
- Silicon tracker and superconducting magnet; background rejection achieved with a combination of ToF, TRD, RICH and ECAL.
- Precursor flight (AMS-01) in 1998.

PEBS (Positron Electron Balloon Spectrometer)

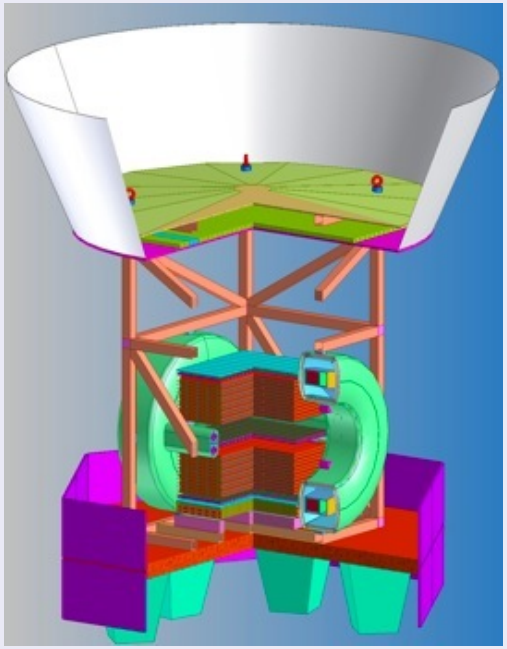

- First balloon flight: 2014 from McMurdo.
- Positron fraction (and all electrons) up to 2 TeV.
- Scintillating fiber tracker with SiPM readout and superconducting magnet; ToF, TRD and ECAL for background rejection.
- PEBS-1 (with a permanent magnet, e^+ fraction up to 20 GeV) planned from 2012.

Future and perspectives–II

CALET (CALorimetric Electron Telescope)

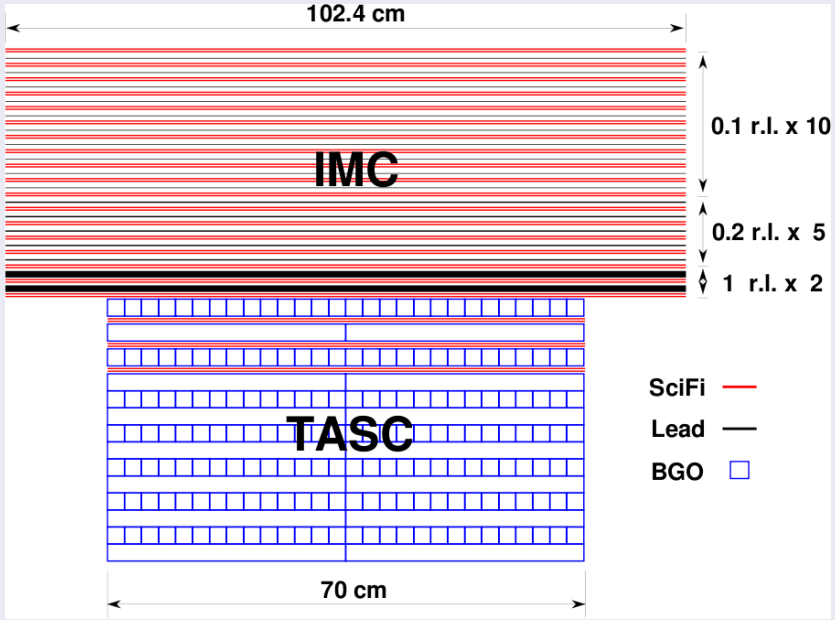

- Three years on the ISS, starting in ≈ 2013.
- All electrons up to 20 TeV.
- ACD, double layer Si array, IMaging Calorimeter (IMC), Total Absorption Calorimeter (TASC).
- CALET-Polar to be flown on a LDBF in ≈ 2010 (3 technical flights before that).

ECAL (Electron CALorimeter)

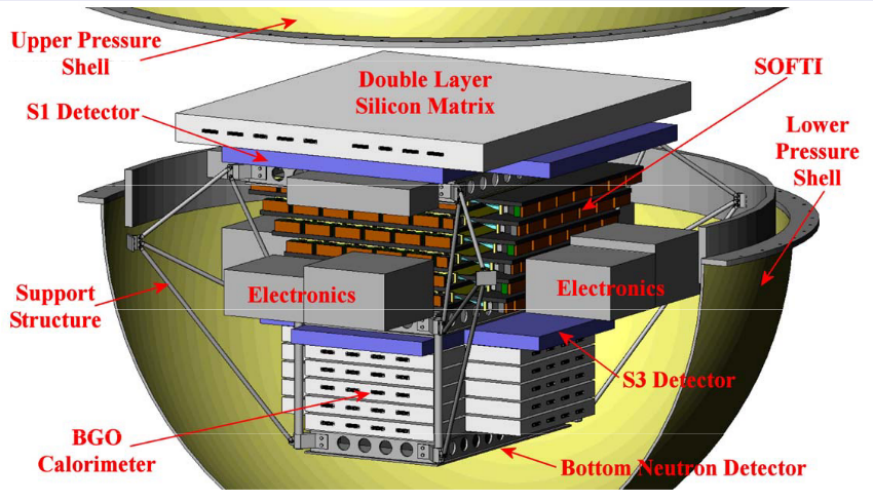

- Two Long Duration Balloon Flights from Antarctica.
- All electrons up to a few TeV.
- Double-layer Si matrix, Scintillating Optical Fiber Track Imager (SOFTI), BGO calorimeter, neutron detector.
- Based on the ATIC heritage.

Future and perspectives–III

CREST (Cosmic Ray Electron Synchrotron Telescope)

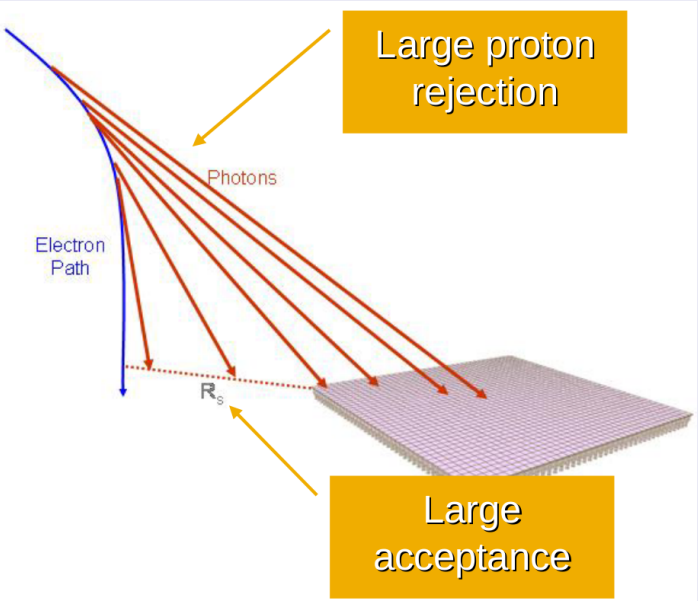

- Two Antarctic LDBFs planned for 2010-2012.
- All electrons from 2 TeV to 50 TeV.
- Detect synchrotron radiation of primary electron as it passes through Earth's magnetic field: 1024 BaF_2 crystal with hermetic ACD.
- Signal: line of photons arriving nearly simultaneously (mean energy 10 keV–5 MeV, related to the primary electron energy).

CTA, AGIS

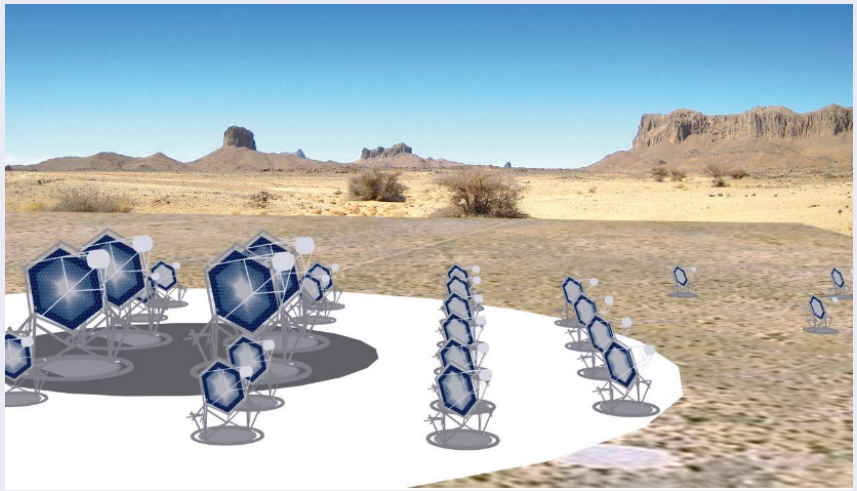

- Planning for the next-generation ground-based gamma-ray observatories started.
- Efforts currently ongoing in the U.S., Europe, and Japan may unify into a world-wide collaboration.
- Sensitivity improved by one order of magnitude.
- All electrons up to $\approx$ 10 TeV.

Conclusions

- Long (at least four decades old) and fascinating story.
  - Many many experiments, huge body of knowledge obtained.
- Last two years have been particularly exciting:
  - Data of unprecedented quality and energy reach published by Pamela, ATIC, Fermi, H.E.S.S.
  - We can expect more from Pamela (positron and antiproton fraction, all electrons) and Fermi (anisotropies in the arrival directions).
- More exciting years to come:
  - Many experiments (in space, on balloons and on the ground) planned for the near future.